DraftSight™

DraftSight Training Guide

Dassault Systèmes
10, rue Marcel Dassault
78140 Velizy-Villacoublay
France

©2011 Dassault Systèmes. All rights reserved.
DraftSight and the DraftSight logos are registered trademarks of Dassault Systèmes or its subsidiaries in the US and/or other countries. All other brand or product names are trademarks or registered trademarks of their respective holders.

The information and the software discussed in this document are subject to change without notice and are not commitments by Dassault Systèmes or its subsidiaries.

No material may be reproduced or transmitted in any form or by any means, electronic or mechanical, for any purpose without the express written permission of Dassault Systèmes or its subsidiaries.

The software discussed in this document is furnished under a license and may be used or copied only in accordance with the terms of this license. Nothing stated in, or implied by, this document or its contents shall be considered or deemed a modification or amendment of any warranties set forth in the terms of the software license agreement.

COMMERCIAL COMPUTER SOFTWARE PROPRIETARY
US Government Restricted Rights. Use, duplication, or disclosure by the government is subject to restrictions as set forth in FAR 52.227-19 (Commercial Computer Software Restricted Rights), DFARS 227.7202 (Commercial Computer Software Restricted Rights), DFARS 227.7202 (Commercial Computer Software and Commercial Computer Software Documentation), and in the license agreement, as applicable.

Contractor/Manufacturer:
Dassault Systèmes
10, rue Marcel Dassault
78140 Velizy-Villacoublay
France

Part Number: PMT1180-ENG

Introduction

About This Course 2
What is DraftSight? 2
Prerequisites 2
Course Length 2
Using This Book 2
About the Training Files 2
Conventions Used in This Book 3

Section 1
User Interface

Objectives 5
Pointing Device 5
DraftSight Window 5
Overview 6
Two-Button Mouse 6
Microsoft IntelliMouse 6
General Procedure 7
Command Exercise - Pointing Device 8
DraftSight Window 9
Overview 9
Title Bar 10
Command Access 10
Command Overview 10
General Procedure 10
Pull-Down Menu 11
Command Access 11
Command Overview 11
General Procedure 11
Toolbars 12
Command Access 12
Command Overview 12
General Procedure 12
Graphics Window 13
Command Access 13
Command Overview 13
General Procedure 14
Command Line 15
Command Access 15
Command Overview 15
General Procedure 15
Status Bar 16
Command Access 16
Command Overview 16
General Procedure 17
Shortcut Menus 18
Command Access 18

Command Overview 18
General Procedure. 18
Dialog Boxes. 19
Command Access. 19
Command Overview 19
General Procedure. 19
Keyboard Options 20
Command Overview 20
General Procedure. 20
Help Menu 21
Command Access. 21
Command Overview 21
General Procedure. 21
Section 1 Review Questions. 22

Section 2
Creating a Simple Drawing

Objectives 23
New 24
Command Access. 24
Command Overview. 24
General Procedure. 24
Line 25
Command Access. 25
Command Overview. 25
General Procedure. 25
Command Exercise - Line. 27
Command Exercise - Line. 28
Delete Command 29
Command Access. 29
Command Overview 29
General Procedure. 29
Command Exercise - Delete. 30
Command Exercise - Delete. 31
Rectangle. 32
Command Access. 32
Command Overview 32
General Procedure. 32
Command Exercise - Rectangle. 33
Circle 34
Command Access. 34
Command Overview 34
General Procedure. 34
Command Exercise - Circle 35
Drafting Settings 36
Command Access. 36
Command Overview 36

Snap . . . 36
Grid . . . 36
General Procedure. . . . 36
Polar Snap. . . . 37
General Procedure. . . . 37
Object Snap. . . . 37
General Procedure. . . . 37
Entity Track . . . 38
General Procedure. . . . 38
Command Exercise - Entity Tracking. . . . 39
Command Exercise - Entity Snap . . . 40
Command Exercise - Entity Snap . . . 41
Command Exercise - Entity Snap . . . 42
Arc . . . 43
Command Access. . . . 43
Command Overview . . . 43
General Procedure. . . . 43
Command Exercise - Arc . . . 44
Undo and Redo. . . . 45
Command Access. . . . 45
Command Overview . . . 45
General Procedure. . . . 45
Command Exercise - Undo / Redo . . . 46
Polygon . . . 47
Command Access. . . . 47
Command Overview . . . 47
General Procedure. . . . 47
Command Exercise - Polygon . . . 48
Drawing Setup . . . 49
Command Overview . . . 49
General Procedure. . . . 49
Section 2 Exercise - Standard Bracket. . . . 50
Section 2 Exercise - Simple House . . . 51
Section 2 Review Questions. . . . 52

Section 3
Coordinates

Objectives . . . 55
Coordinate System . . . 56
Command Overview . . . 56
General Procedure. . . . 56
CCS Icon . . . 57
Command Access. . . . 57
Command Overview . . . 57
General Procedure. . . . 57
Inquiry. . . . 58
Command Access. . . . 58

Command Overview 58
General Procedure. 58
Units. 59
Command Access. 59
Command Overview 59
General Procedure. 59
Coordinate Entry 60
Command Overview 60
General Procedure. 60
Command Exercise - Absolute Coordinates 61
Command Exercise - Relative Coordinates 62
Command Exercise - Polar Coordinates 63
Command Exercise - Direct Distance Method 64
Snap from Entity Snap 65
Command Access. 65
Command Overview 65
General Procedure. 65
Drawing Boundary 66
Command Access. 66
Command Overview 66
General Procedure. 66
Drawing Boundary for Architectural Drawings 67
Command Exercise - Drawing Boundary. 71
Section 3 Exercise - Base Plate 72
Section 3 Exercise - Architectural Coordinates 73
Section 3 Review Questions. 74

Section 4
Modify Commands

Objectives 77
Selecting Entities 78
Command Overview 78
General Procedure. 79
Command Exercise - Selecting Entities 80
Move Command 81
Command Access. 81
Command Overview 81
General Procedure. 81
Command Exercise - Move. 82
Copy Command 83
Command Access. 83
Command Overview 83
General Procedure. 83
Command Exercise - Copy 84
Command Exercise - Copy 85
Offset Command 86
Command Access. 86

Command Overview 86
General Procedure. 86
Command Exercise - Offset 87
Mirror Command 88
Command Access. 88
Command Overview 88
General Procedure. 88
Command Exercise - Mirror. 89
Rotate Command 90
Command Access. 90
Command Overview 90
General Procedure. 90
Command Exercise - Rotate. 91
Command Exercise - Rotate. 92
Scale Command 93
Command Access. 93
Command Overview 93
General Procedure. 93
Command Exercise - Scale 94
Command Exercise - Scale 95
Trim Command 96
Command Access. 96
Command Overview 96
General Procedure. 96
Command Exercise - Trim 97
Command Exercise - Trim 98
Extend Command 99
Command Access. 99
Command Overview 99
General Procedure. 99
Command Exercise - Extend 100
Section 4 Exercise - Subassembly. 101
Section 4 Exercise - Modify Commands 102
Section 4 Review Questions. 103

Section 5
Properties and Layers Toolbars

Objectives 105
Layer Control 106
Command Access. 106
Command Overview 106
General Procedure. 107
Command Exercise - Layers. 108
Activate Layer Command. 109
Command Access. 109
Command Overview 109
General Procedure. 109

Color Control Command. 110
Command Access. 110
Command Overview 110
General Procedure. 110
LineStyle Control Command 111
Command Access. 111
Command Overview 111
General Procedure. 111
LineWeight Control Command 112
Command Access. 112
Command Overview 112
General Procedure. 112
Layers Manager Command 113
Command Access. 113
Command Overview 113
General Procedure. 114
Command Exercise - Layers. 115
Command Exercise - Layers. 116
Property Painter 117
Command Access. 117
Command Overview 117
General Procedure. 117
Command Exercise - Property Painter. 118
Properties Command 119
Command Access. 119
Command Overview 119
General Procedure. 119
Command Exercise - Properties 120
Command Exercise - Change Properties 121
Section 5 Exercise - Organize Your Drawing 122
Section 5 Exercise - Object Properties. 123
Section 5 Review Questions. 124

Section 6
Drawing Files

Objectives 127
New 128
Command Access. 128
Command Overview 128
General Procedure. 128
Save 129
Command Access. 129
Command Overview 129
General Procedure. 129
Open. 130
Command Access. 130
Command Overview 130

General Procedure. 130
File Management 131
Command Access. 131
Command Overview 131
General Procedure. 131
Command Exercise - File Management 132
File Utilities. 133
Command Access. 133
Command Overview 133
General Procedure. 133
Section 6 Review Questions. 134

Section 7
Advanced Commands

Objectives 135
Point. 136
Command Access. 136
Command Overview 136
General Procedure. 136
Command Exercise - Point 137
Point Format. 138
Command Access. 138
Command Overview 138
General Procedure. 138
Command Exercise - Point Format 139
Mark Divisions 140
Command Access. 140
Command Overview 140
General Procedure. 140
Command Exercise - Measure and Divide. 141
PolyLine 142
Command Access. 142
Command Overview 142
General Procedure. 142
Command Exercise - PolyLine. 143
Explode 144
Command Access. 144
Command Overview 144
General Procedure. 144
Edit PolyLine 145
Command Access. 145
Command Overview 145
General Procedure. 145
Command Exercise - Edit PolyLine. 146
Blocks 147
Command Access. 147
Command Overview 147

General Procedure. 147
Command Exercise - Block. 148
Insert Block. 149
Command Access. 149
Command Overview 149
General Procedure 149
Command Exercise - Insert Block 150
Command Exercise - Insert Block 151
Clean 152
Command Access. 152
Command Overview 152
General Procedure 152
ExportDrawing. 153
Command Access. 153
Command Overview 153
General Procedure 153
Command Exercise - Export Block 154
Hatch 155
Command Access. 155
Command Overview 155
General Procedure 155
Command Exercise - Hatch 158
Command Exercise - Hatch 159
Command Exercise - Edit Hatch 160
Pattern. 161
Command Access. 161
Command Overview 161
General Procedure 161
Command Exercise - Rectangular Pattern 163
Command Exercise - Circular Pattern. 164
Stretch 165
Command Access. 165
Command Overview 165
General Procedure 165
Command Exercise - Stretch 166
Change Length. 167
Command Access. 167
Command Overview 167
General Procedure 167
Command Exercise - Change Length 168
Split 169
Command Access. 169
Command Overview 169
General Procedure 169
Command Exercise - Split 170
Fillet. 171

Command Access. 171
Command Overview 171
General Procedure 171
Command Exercise - Fillet 172
Command Exercise - Fillet 173
Chamfer. 174
Command Access. 174
Command Overview 174
General Procedure 174
Command Exercise - Chamfer 175
EntityGrips 176
Command Access. 176
Command Overview 176
General Procedure 176
Command Exercise - Egrips 178
Command Exercise - Egrips 179
Egrip Settings. 180
Command Access. 180
Command Overview 180
General Procedure 180
Section 7 Review Questions. 181

Section 8
View Commands

Objectives 183
Dynamic Pan 184
Command Access. 184
Command Overview 184
General Procedure. 184
Dynamic Zoom. 185
Command Access. 185
Command Overview 185
General Procedure 185
Zoom Window 186
Command Access. 186
Command Overview 186
General Procedure 186
Zoom Previous. 187
Command Access. 187
Command Overview 187
General Procedure 187
Zoom Options. 188
Command Access. 188
Command Overview 188
General Procedure 188
Command Exercise - Dynamic Zoom and Pan 189
Rebuild 190

Command Access. 190
Command Overview 190
General Procedure 190
Command Exercise - Zoom and Rebuild 191
Named Views 192
Command Access. 192
Command Overview 192
General Procedure 192
Command Exercise - Named View 193
Multiple ViewTiles. 194
Command Access. 194
Command Overview 194
General Procedure 194
Command Exercise - Multiple ViewTiles 196
Section 8 Exercise - Viewing Drawings 197
Section 8 Exercise - View Commands 199
Section 8 Review Questions. 200

Section 9
Text and Dimensions

Objectives 201
Simple Note 202
Command Access. 202
Command Overview 202
General Procedure 202
Command Exercise - Simple Note. 203
Command Exercise ⊰ Simple Note 204
Note 205
Command Access. 205
Command Overview 205
General Procedure 205
Command Exercise - Note 206
Command Exercise - Note 207
Text Style 208
Command Access. 208
Command Overview 208
General Procedure 208
Command Exercise - Text Styles. 212
Command Exercise - Text Styles 213
Edit Annotation 214
Command Access. 214
Command Overview 214
General Procedure 214
Command Exercise - Edit Text 215
Command Exercise - Edit Text 216
Command Exercise - Edit Text 217
Command Exercise - Edit Text 218

Find and Replace 219
Command Access. 219
Command Overview 219
General Procedure 219
Spell Check 220
Command Access. 220
Command Overview 220
General Procedure 220
Command Exercise - Spell Check 221
Dimensions 222
Command Access. 222
Command Overview 222
General Procedure 224
Command Exercise - Dimensions 226
Command Exercise - Dimensions 227
Command Exercise - Dimensions 228
Command Exercise - Dimensions 229
Dimension Style 230
Command Access. 230
Command Overview 230
General Procedure 237
Command Exercise - Dimension Styles 238
Edit Dimension Location 239
Command Access. 239
Command Overview 239
General Procedure 239
Edit Dimension Text 240
Command Access. 240
Command Overview 240
General Procedure 240
Edit Dimension Properties 241
Command Access. 241
Command Overview 241
General Procedure 241
Command Exercise - Edit Dimensions 242
Command Exercise - Edit Dimensions 243
Command Exercise - Edit Dimensions 244
Command Exercise - Edit Dimensions 245
Section 9 Review Questions. 246

Section 10
Drawing Output and Layout

Objectives 249
Drawing Layout 250
Command Access. 250
Command Overview 250
General Procedure 250

Command Exercise - Creating a Drawing Layout 252
Command Exercise - Creating a Drawing Layout 253
View Tiles 254
Command Access. 254
Command Overview 254
General Procedure 254
Command Exercise - Creating ViewTiles in the Sheet Tab. . 256
Working with Viewports on Sheets 257
Command Access. 257
Command Overview 257
Print 260
Command Access. 260
Command Overview 260
General Procedure 260
Command Exercise - Printing a Drawing 263
Section 10 Review Questions 264

Introduction

When you complete this lesson, you will be able to do the following:

- Understand the basic capabilities of DraftSight.
- Start a DraftSight session.
- Identify the principal components of the DraftSight user interface.
- Identify the Graphics Area, Layout Tabs, Command Window, Command Prompt, and Status Bar.
- Identify the default toolbars in the user interface: Main Menu, Standard, Draw, Modify, Layer, Properties and EntitySnap.
- Understand the Coordinate System.
- Utilize the Draw commands.
- Utilize the Modify commands.
- Utilize the Properties and Layer functions.
- Understand DraftSight File Management.
- Understand the Pan and Zoom capabilities in DraftSight.
- Utilize the Text and Dimension functionality.
- Utilize the Print function.

About This Course

The goal of this course is to teach you how to use DraftSight. This course is designed to follow a sequential logical order. The focus of this course is on the fundamental skills and concepts central to the successful use of DraftSight. You should view the training course manual as a supplement to, not a replacement for, the system documentation and online help. Once you have developed a good foundation in the basic skills, you can refer to the online help for information on less frequently used command options.

What is DraftSight?

DraftSight is a drafting automation software tool. A coordinate system determines each point of a drawing surface or entity unambiguously. DraftSight uses the Cartesian coordinate system consisting of three coordinate axes. Axes are arranged orthogonally, crossing at the origin. All axes use the same unit of measurements.

Prerequisites

Students attending the course are expected to have the following:

- Drafting experience.
- Experience with the Windows® operating system.

Course Length

The recommended minimum length of this course is two days.

Using This Book

This training manual is intended to be used in a classroom environment under the guidance of an experienced DraftSight instructor. It is not intended to be a self-paced tutorial. The examples are designed to be demonstrated "live" by an instructor.

About the Training Files

A complete set of the various training files used throughout this course can be downloaded from the DraftSight website, `www.DraftSight.com/files/Section (#)/(filename.dwg)`.

Example: `www.DraftSight.com/files/Section 2/arc 1.dwg`.

The files are supplied in signed, self-extracting executable packages.

The files are organized by lesson number.

Conventions Used in This Book

This manual uses the following typographical conventions:

Convention	Meaning
Bold	DraftSight commands and tools appear in this style. For example, Clicking the **Line** icon means choose the **Line** tool on the Draw toolbar.
↵	The ↵ symbol means press the **Enter** key on the keyboard.
`Command prompt`	Prompts and information in the command window and Command prompt are displayed in this font. For example: `Specify next point»`
17 Click Line.	The steps in the lessons are numbered in SansSerif bold.

Section1
User Interface

Estimated Class Time: 1.5 hours

Objectives

This section introduces the interface available within DraftSight starting with the pointing device. The DraftSight window includes the Pull-Down Menu, Toolbars, the Graphics Window, the Command Line and the Status Bar. In addition you will learn special keyboard options and shortcut menus, how to use the dialog box, and how to access DraftSight's online help.

Pointing Device

- Use the mouse for selecting options in the DraftSight window.

DraftSight Window

The DraftSight window consists of the following areas:

- **Title Bar**

Minimize and maximize the DraftSight window from the Title Bar.

- **Pull-Down Menu**

Select commands from the pull-down menu headings.

- **Toolbars**

Use DraftSight toolbars as another method for selecting commands.

- **Graphics Window**

Create your drawing and drawing sheets in this area.

- **Command Line**

The command line will prompt you for the next step.

- **Status Bar**

This area contains handy toggle switches and displays the x, y and z coordinates.

- **Shortcut Menus**

Right-click your pointing device to display context-sensitive shortcut menus.

- **Dialog Boxes**

Input critical data for certain functions while creating your design.

- **Keyboard Options**

Use the keyboard to type options, text, or press Esc to cancel commands.

- **Help Menu**

Use the DraftSight Help menu to learn more about the program.

Overview

Use the pointing device to select entities and options. This tutorial reviews the functions of a two- or three-button mouse. The pointing device is configured in the User Preference tab of the Options menu under **Mouse Options.** The Left Mouse Button is typically the pick button, and the Right Mouse Button is the <Enter> ↵ button. Pressing the <Enter> ↵ button, when the cursor is in the graphics area, activates a shortcut menu with the option to repeat the last command. This feature can be disabled in the User Preference tab of the Options dialog, under **Mouse Options**, by expanding right-clicking when a command is in progress; and selecting is the same as pressing <Enter>↵ . Holding the right mouse button and dragging accesses the mouse-gesture widget. Use the mouse-gesture widget to quickly invoke commonly used commands while using DraftSight. To customize the mouse-gesture widget; click **Tools>Mouse Gestures** from the Pull-Down Menu.

Two-Button Mouse

Button	Action
Left Mouse Button	Use to pick entities or options.
Right Mouse Button	Use <Enter>↵ to complete the command, repeat the last command or access a context-sensitive menu.
Right Mouse Button (press + drag)	Accesses the mouse gesture widget.
Shift + Right Mouse Button	Brings up the EntitySnap menu.

Microsoft IntelliMouse®

Button	Action
Left Mouse Button	Use to pick entities or options.
Right Mouse Button	Use <Enter>↵ to complete the command, repeat the last command, access a context-sensitive menu, or access the mouse-gesture widget.
Right Mouse Button (press + drag)	Accesses the mouse-gesture widget.
Shift + Right Mouse Button	Brings up the EntitySnap menu.
Middle Button (press + drag)	Use to pan the drawing.
Middle Button (roll)	Use to zoom the drawing.

General Procedure

1 Pick an icon from a toolbar using the left mouse button on the mouse.
2 Follow the command prompts.
3 Press <Enter>↵ to complete the command or to continue to the next step. Press <Enter>↵ again to repeat the command, or select a choice from the shortcut menu.

TIP:

- Clicking in a blank area of the graphics window will create a selection window. Press **Esc** to cancel this selection window, or simply make the other corner.
- Making a selection window from right to left will select all entities the window crosses. Making a selection window from left to right will only select the entities that are completely within the selection window.
- Picking entities in the graphics window when the command line is blank will highlight the entities and display the EntityGrips. Press **Esc** to cancel this selection.
- The left and right buttons can be reversed from the *Windows Setting Menu* (from the Start Menu). Select **Control Panel,** then select **Printers and Other Hardware,** then choose **Mouse**.

Command Exercise - Pointing Device

Estimated time to completion: 5 minutes

Drawing Name: None (start from scratch)

Scope:

Practice left and right mouse button functions.

1. **Draw line segments.**
2. **Press the right mouse button on the mouse to repeat the command.**
3. **Press ESC to exit the command.**
4. **Practice selecting a single entity.**
5. **Practice making a selection window.**
6. **Activate the EntitySnap menu.**
7. **Activate the Toolbar shortcut menu**
8. **Activate the command line shortcut menu.**

Solution:

1. Click the **Line** icon on the Draw toolbar and draw some line segments. Click the right mouse button. This will bring up the Context menu. Select **Enter** to complete the **Line** command. The command line is now blank.
2. Press the right mouse button on the mouse again. This will bring up the Context menu. Select **Repeat LINE** option. Complete the **Line** command so the command line is blank.
3. Click one of the line segments. Notice that it becomes highlighted and the EntityGrips are active (the blue boxes on the line). Press **Esc** to cancel and clear the EntityGrips.
4. Click a blank area in the graphics window. Notice this will create a rectangular selection window. You will be prompted to select the other corner. Making the selection window from left to right results in only entities completely within the window being selected. Press **Esc** to cancel this selection. Now, make the window from right to left. The entities that are crossed by the selection box are now highlighted. Press **Esc** again to exit.
5. Activate the EntitySnap shortcut menu using the mouse function according to your pointing device. Press **Esc** to cancel.
6. Press the right mouse button in the command window to view this menu. Press **Esc** to cancel.

DraftSight Window

Overview

The DraftSight window consists of a Title Bar, Pull-Down Menus, Toolbars, a Graphics Window, the Command Line and the Status Bar.

DraftSight Window Detail	Location	Function Overview
Title Bar	Top	Lists the name of the current drawing. Contains buttons to minimize, maximize or exit DraftSight. Contains buttons to minimize, maximize or close the current drawing.
Pull-Down Menu	Beneath the Title Bar	Lists DraftSight commands by category. Words followed by a black arrow will display an additional list of related options. Words followed by an ellipsis (...) will open a dialog box.
Toolbars	Docked at sides or floating in the graphics area	Displays commands as icons (buttons) in related toolbar categories. The toolbar pictured in the top row is the Standard Toolbar. The toolbar beneath it is the Object Properties toolbar. Accessing a command from a toolbar is usually a faster, more direct approach. The toolbars contain most of the commands, but not all of them.
Graphics Window	Middle area	Area where the drawing is created. The Model tab is for creating the drawing. The Sheet tabs are for creating the finished layout for printing.
Command Line	Bottom	Area where DraftSight prompts the user for the next step. The user must press <Enter>↵ after typing the command or command line options. The Esc key will cancel any command, leaving the command line blank and ready for the next command.
Status Bar	Beneath the Command Line	Displays the coordinates of the cursor location. Displays the O/Off status of special toggle switches. Single-click to toggle these options On or Off.

Title Bar

Command Access

Command Overview

The Title Bar will display the name of the drawing. Buttons are displayed in the upper right corner to minimize, maximize, resize or close the DraftSight window or an individual drawing file. Remember that when any program is minimized, it will remain listed in the Windows Start bar.

General Procedure

1 To maximize the DraftSight window, select the following icon.
2 To maximize the graphics window, select the following icon.
3 To minimize the DraftSight window, select the following icon.
4 To minimize the Drawing window, select the following icon.
5 To bring the DraftSight window back to active, select the following icon.

TIP:

- Keep the DraftSight and graphics window maximized for optimum drawing space.
- Use the ALT+Tab keys to alternate between programs, or select the program from the Windows Start bar.
- Practice minimizing and maximizing the DraftSight and Drawing windows.

Pull-Down Menu

Command Access

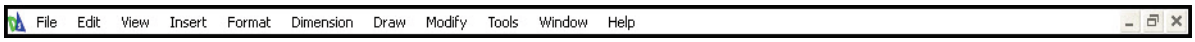

Command Overview

The pull-down menu is one way to access commands and command options. This menu appears at the top of the DraftSight window, beneath the Title Bar. The commands are arranged into categories similar to most Windows programs. Select the category name to view the options.

Pull-Down Menu Heading	Overview
File	Contains commands to manage the drawing files (Open, Save, Close, Export), print files, clean and recover files.
Edit	Contains the Windows Cut, Copy and Paste commands as well as Undo and Redo.
View	Contains commands that have to do with viewing a drawing.
Insert	Contains commands that permit the insertion of graphic data, such as blocks and reference drawings.
Format	List options that pertain to the drawing format, including units, drawing limits, layers, LineStyle and LineWeights.
Dimension	Dimension commands can be accessed from the pull-down menu.
Draw	Draw commands can be accessed from the pull-down menu.
Modify	Make changes to the objects in the drawing with options found in the pull-down menu
Tools	Tools in this Pull-Down menu include Properties and Options.
Window	Manage multiple drawing documents in the pull-down menu.
Help	DraftSight on-line help can be accessed from this menu.

General Procedure

1 Select the heading of the desired pull-down menu category.
2 Select the desired option from the list.
   - Words followed by a black arrow will display an additional list of related commands.
   - Words followed by an ellipsis (...) will open a dialog box.

Toolbars

Command Access

Toolbar Menu	
Pull-Down Menu	
Command	Toolbars (right mouse click on any visible toolbar, select Toolbars...)
Alias	TBCONFIG
Dialog Box	Specify Toolbars

Command Overview

Selecting a toolbar button icon is generally a faster and more efficient way to initiate a command. Toolbars can be floating or docked.

The default toolbars are Standard, Properties, Layers, Draw and Modify.

General Procedure

To open or close a toolbar using the shortcut menu:

1. RightcClick on any toolbar and select **Toolbars** from the shortcut menu.
2. Select the desired toolbar from the list.
3. Click **OK**.

To open or close a toolbar from the command prompt:

1. Type `toolbar` at the command prompt and press the <Enter>↵ key.
2. Click the desired toolbar from the list.
3. Click **OK**.

To dock or undock a toolbar:

1. To undock a toolbar, move your cursor to the beginning of the toolbar (where there is a series of dots) and look for the cursor display to change to four arrows. Click and hold the button. Drag the toolbar to a new location and release.
2. To dock the toolbar, drag it to a new location and look for it to snap into a new location. When you have found the proper spot, release.

TIP:

- Selecting a toolbar button or icon is generally a faster and morthe efficient way to initiate a command.
- When you point to a toolbar button, a label will appear with the command name, and a tooltip will appear at the bottom of the screen.
- The Standard Toolbar is normally docked at the top, and the Object Properties and Layers toolbar beneath it.

Graphics Window

Command Access

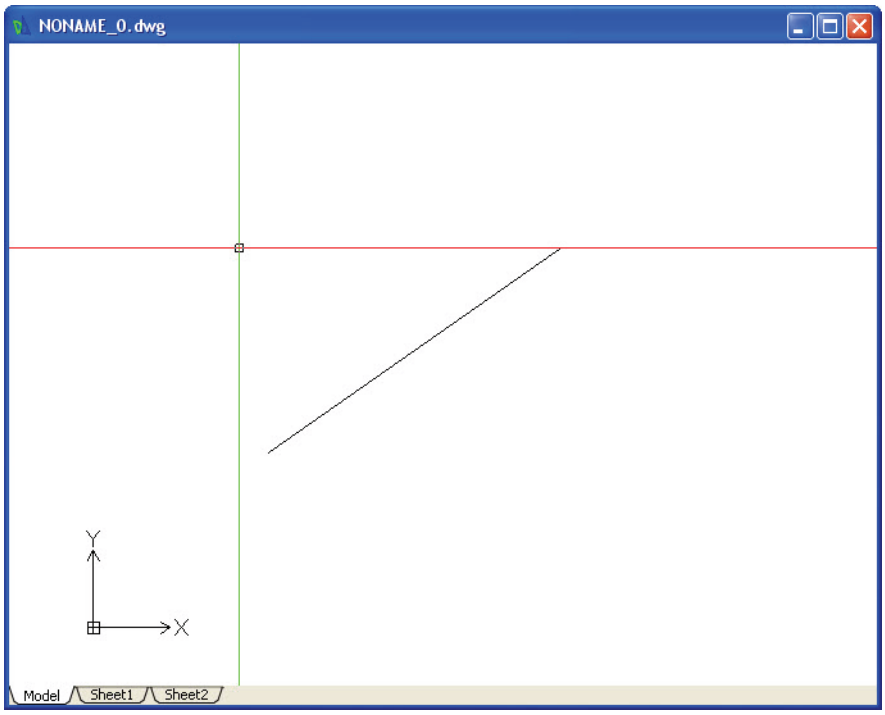

Command Overview

When working in the graphics window, be sure that the Model tab is selected. Later this tutorial will cover how to create a drawing layout. The cursor must be in the graphics window in order to pick points for drawing entities, or select entities to modify. Right-click in the graphics window to execute a command, proceed with the next step of the command line, of if the command line is blank, repeat the last command. Clicking in a blank area of the graphics window will initiate a selection window or box. You must pick the opposite corner whether you want to select an entity or not, or press **Esc** to cancel the window selection. Multiple drawings may be opened in one DraftSight session. Minimize a graphics window, or use the options from the Window pull-down menu to select the current drawing. Close drawings that are not being used.

General Procedure

To minimize, maximize, resize or close a graphics window:

1 Click this button to minimize the graphics window
2 Click this button to maximize the graphics window
3 Click this button to resize the graphics window
4 Click this button to close a drawing

TIP:

- The Model tab should be selected when creating a drawing.
- The cursor must be in the graphics window in order to pick points for drawing entities, or selecting entities to modify.
- Right-click in the graphics window to execute a command, proceed with the next step of the command, or if the command line is blank, repeat the last command.
- Picking in a blank area of the drawing window will initiate a selection window or box. You must pick the opposite corner whether you want to select an entity or not, or press **Esc** to cancel the selection window.
- Close drawings that are not being used.

Command Line

Command Access

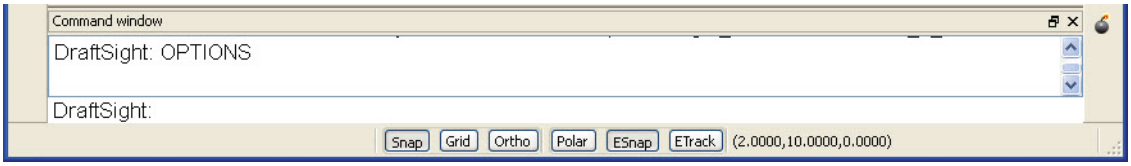

Command Overview

The command line at the bottom of the DraftSight window will prompt the user for the next step. It is important to read the command line. A blank command line means that DraftSight is waiting for the user to begin a command. Remember to press <Enter>↵, after typing a command, a command alias, a command line option, or after selecting entities. Generally it is best to view three lines of text at the command line. The scroll bar to the right of the command line window can be used to view previous command lines. The F2 function key will display the entire text window. The up and down arrows on the keyboard will carry the last option typed to the bottom command line. If a default value is shown, it is not necessary to type that number in the command line. To accept the default value, just press <Enter>↵.

General Procedure

How to follow the command line prompts:

1. Type the command, the command alias, or the command line option and press <Enter>↵.
2. Follow the command line prompts:
   - When prompted to select entities, pick the entities and then press <Enter>↵ to continue.
   - When presented with command line options, type the underlined characters of the option and press <Enter>↵ to continue.
   - When presented with a default choice, press <Enter>↵ to accept the default, or type the preferred options and press <Enter>↵.

TIP:

- It is important to remember to read the command line, as this is your line of communication with DraftSight.
- Use the keyboard <Enter>↵ key or the right mouse button on the mouse.
- When using the right mouse button, be sure that the cursor is in the Graphics window.
- To disable the command options cursor menu, select **Tools**>**Option**>**User Preferences**>**Mouse Options**>**Options** and make sure you uncheck **Display shortcut menu by right-clicking**.

Status Bar

Command Access

Command Overview

The Status Bar is at the bottom of the DraftSight window. Select the buttons to turn the options **On** or **Off**. Right-click to access the settings dialog box for the corresponding Status Bar options, or other options that apply.

Status Bar Option	Overview	Function Key
Tool Tip Display	Displays a Tool Tip, and the Command name when the pointing device 'hovers' over an icon.	
Snap	Snap On will restrict the cursor to select points at designated X and Y increments. Snap spacing may or may not be equal to the Grid spacing. However, if the Grid spacing is set to equal 0, it will equal the Snap spacing.	F9
Grid	This switch turns the Grid **On** and **Off**. The Grid is a visual tool, and does not restrict cursor selection. Grid spacing may or may not be equal to Snap spacing. However, if the Grid spacing is set to equal 0, it will equal the Snap spacing.	F7
Ortho	Use Ortho (for orthogonal) On when dragging the mouse to: Draw straight lines. Move, copy or mirror entities along a linear plane. Rotate entities in 90-degree increments. Ortho is either On or Off and does not have a settings option.	F8
Polar	Turns Polar Snap **On** and **Off**. When Polar Snap is On, the angular direction and distance from the last point selected will be tracked and displayed according to the Polar tracking settings.	F10
ESnap	When EntitySnap is On, the cursor will always gravitate to specified points on an entity in the drawing. Unlike Snap, which follows a grid pattern, ESnap refers to an entity in the drawing and will display EntitySnap markers.	F3

Status Bar Option	Overview	Function Key
ETrack	Entity Tracking, when On, will combine with ESnap (Which also must be On) to allow the cursor to track along alignment paths based on the other EntitySnap points in the drawing. To use entity tracking, you must turn on one or more EntitySnaps.	F11
Coordinates Display	Displays the x, y, z, coordinates of the cursor location. The options are Relative, Absolute and Off. The Absolute option is the default, and the Relative option will only display when a command is initiated and a point is selected.	

General Procedure

1. Select the Status Bar option to turn it **On** or **Off**.
2. Right mouse click on a Status Bar option to access the corresponding settings dialog box.

TIP:

- Select either the Status Bar button, or select the corresponding function key from the keyboard.
- A Status Bar option can be turned **On** or **Off** while using a Draw or Modify command. Therefore, beginning a **Line** command, and deciding to turn Ortho On or Off while in the middle of the command is acceptable.

Shortcut Menus

Command Access

Right mouse click to access a Shortcut menu.

Command Overview

DraftSight, like most Windows programs, has numerous shortcut menus which are initiated by selecting the <Enter>↵ button (**RMB**) on the mouse. The specific shortcut menu that will appear depends on where the cursor is in relation to the DraftSight screen, and what command has been initiated.

General Procedure

1 Place the cursor over a specific part of the DraftSight window, or button.
2 Right-click to access the corresponding shortcut menu.
3 Select a Shortcut menu option.

TIP:

- This tutorial will cover the details of the Shortcut menus within the appropriate chapter topic.
- Press the **Esc** key to cancel a Shortcut menu, or select **Cancel**, or press <Enter>↵ from the menu when that option appears in the menu.
- To disable the command options cursor menu, select **Tools**>**Option**>**User Preferences**>**Mouse Options**>**Options** and make sure you uncheck **Display shortcut menu by right clicking**.

Dialog Boxes

Command Access

Toolbar Menu	Certain command buttons will activate a dialog box
Pull-Down Menu	Commands or options followed by an ellipsis (...) will open a dialog box.
Command	Certain typed commands will activate a dialog box.
Alias	Certain commands and aliases will activate a dialog box.
Dialog Box	The name or title will be listed at the top of the dialog box.

Command Overview

Certain commands and options will launch dialog boxes. Commands from the pull-down menus followed by an ellipsis (...) will open a dialog box. When opened, it is not possible to type at the command line, or use any of the commands other than those listed in the dialog box. Use the text boxes to type information, select the appropriate tab, buttons or check boxes, and select **OK** to exit. It is also possible to press the **Esc** key, select the cancel button or the **X** (close icon) in the upper right-hand corner of the dialog box.

General Procedure

1. When a dialog box is open, select or typed the desired options.
2. Click **OK** to exit the dialog box.

TIP:

- To move the dialog box, select the Title Bar, press and drag.
- To type over text in the text areas, click and drag the cursor over selected text, or double-click to select the entire text and then type over it.
- Select the **Help** button in the dialog box for more information.

Keyboard Options

Command Overview

Commands, command aliases, or system variables can be typed at the keyboard. It is important to remember to press <Enter>↵ to execute the command, and follow the command line prompts. When choosing a command line option, type the Underlined character(s) of the desired option. Pressing <Enter>↵ or the spacebar will execute the command. When typing text, however, the <Enter>↵ key is the same as a carriage return on a typewriter, and a spacebar will type a space. Function keys are used to toggle some option **On** and **Off**.

Keyboard Option	Overview
Esc	Escape. Cancels all commands.
Enter	Executes a command.
Spacebar	Works like the <Enter>↵ key except when typing in the text editor.
Arrows	Moves the cursor position. In the case of the command line, arrow keys will bring back previously typed information to the last command line.
Ctrl	Use the Control + single keys to begin selected commands as indicated in the pull-down menus (i.e. Ctrl + S, will Save).

General Procedure

Type the command, command alias, or system variable at the command line.

Press <Enter>↵ to execute the command, or follow the command line prompts.

TIP:

- Remember to press the <Enter>↵ key after typing a command, a command alias, or a system variable.
- Commands, aliases, or system variables are not case sensitive.
- A default is the most common or last option selected and will be shown above the command prompt. Press <Enter>↵ to accept the default. It is not necessary to type the default over again.
- When in doubt about a command location, type it (and remember to press <Enter>↵). This will usually begin the desired command.
- System variable settings will be covered in the tutorial at the appropriate topic.

Help Menu

Command Access

Toolbar Menu	
Pull-Down Menu	Help>Help
Command	Help
Alias	
Dialog Box	? DraftSight

Command Overview

DraftSight Help can be invoked at any time. If the command line is blank, the Help menu will open at one of the options, depending on which option was selected the last time Help was used. If Helps invoked while in the middle of a command, the Help menu will open to the page covering that command. There are four tabs to the Help menu: Contents, Index, Find and Favorites. This Help menu follows a format typical among Windows programs.

General Procedure

To access Help when in the middle of a command:

1 Select the **F1** function key.

To use the Help Contents tab:

1 Click the **Help Contents** tab.
2 Open a topic by double-clicking on it, or single clicking and selecting **Open**.

To use the Help menu Index tab:

1 Click the **Help Index** tab.
2 Begin to type the word.
3 Double-click the index entry or single-click and select **Open**.

To use the Help menu Find tab:

1 Click the **Help Find** tab.
2 Begin to type the word.
3 Double-click the index entry or single click and select **Open**.

TIP:

- Press the **F1** function key while in the middle of a command to open the Help menu pertaining to that command.

Section 1 Review Questions

1 Which is the Pick button and which is the <Enter↵> key on the mouse?

2 Name the areas of the DraftSight screen:

3 How do you move a floating toolbar?

4 How do you dock a floating toolbar?

5 How do you make a docked toolbar float again?

6 What happens if you press the <Enter↵> button on the mouse when the cursor is:
Over a toolbar?

Over the command line?

7 What does the Escape key do?

8 How can a dialog box be closed?

Section 2
Creating a Simple Drawing

Estimated Class Time: 2 hours

Objectives

This section introduces DraftSight commands for creating a simple drawing. Starting with a new drawing, the user will learn to draw Lines, Rectangles, Circles and Arcs, Delete and use Object Snaps.

- **New**
Use the New command to begin a new drawing from scratch.
- **Line**
Draw line segments.
- **Delete**
Delete selected objects in the drawing.
- **Rectangle**
Draw rectangular polylines.
- **Circle**
Draw circles using six different methods.
- **Undo** and **Redo**
Undo previous commands and redo the undo.
- **Drafting Settings**
Specify drafting settings to use as drawing aids.
- **Object Snap**
Select specific parts of draw objects.
- **Arc**
Draw arcs several different ways.
- **Polygon**
Draw multi sided polylines.

New

Command Access

Toolbar Menu	Standard>New
Pull-Down Menu	File>New
Command	New
Alias	Ctrl+N
Dialog Box	Specify Template

Command Overview

To create a new drawing, choose the appropriate template from the Specify Template dialog box and select **Open**. Every time a the new drawing command is invoked, a new drawing is created with the title `NONAME_1.dwg`, `NONAME_2.dwg`, etc.

General Procedure

1. Click the **New** icon on the Standard Toolbar.
2. Choose the appropriate template from the list.
3. Click **Open**.

Line

Command Access

Toolbar Menu	Draw / Line
Pull-Down Menu	Draw>Line
Command	Line
Alias	L
Dialog Box	

Command Overview

A line is defined by two endpoints. A line has 0 Width and 0 Thickness. When drawing a line, specify the first point, then specify the next point. Press the right mouse button with the cursor in the graphics window to access the Line shortcut menu. Type **C** to close two or more line segments.

General Procedure

1. Click the **Line** icon on the Draw toolbar, or by typing L at the blank command prompt.
2. Select the first point, select the next point, and continue selecting the endpoints of each successive line segment.
3. Click the **RMB** with the cursor in the graphics window to access the context specific menu.
4. Press ↵ to end the **Line** command.
5. Press ↵ after ending the **Line** command to repeat the **Line** command.

TIP:

- Move the mouse after selecting each endpoint of the line. This will make it easier to see the last line segment created.
- Click on **Ortho** on the Status bar, or press the **F8** key to alternate between drawing straight or angled line segments.
- Typing U in the middle of the **Line** command will undo the last line segment. Typing U after completing the line segments (at a blank command prompt), will **UNDO** the entire line operation.

Line Shortcut Menu Option	Overview
Enter	Select to exit the Line command.
Cancel	Cancels the command.
ESnap Override	Allows you to force the next point to a specified ESnap location.
Pan	Begins real-time pan.
Zoom	Begins real-time zoom.
Segments	Creates line segments (no rubberbanding between lines.)
Undo	Undoes the last segment of the line.

Command Exercise - Line

Estimated time to completion: 10 minutes.

Drawing Name: `None` (start from scratch)

Scope:

With **ORTHO** On, draw the object below. Drag the line in the desired direction and type the distance. *DO NOT ADD THE DIMENSIONS.*

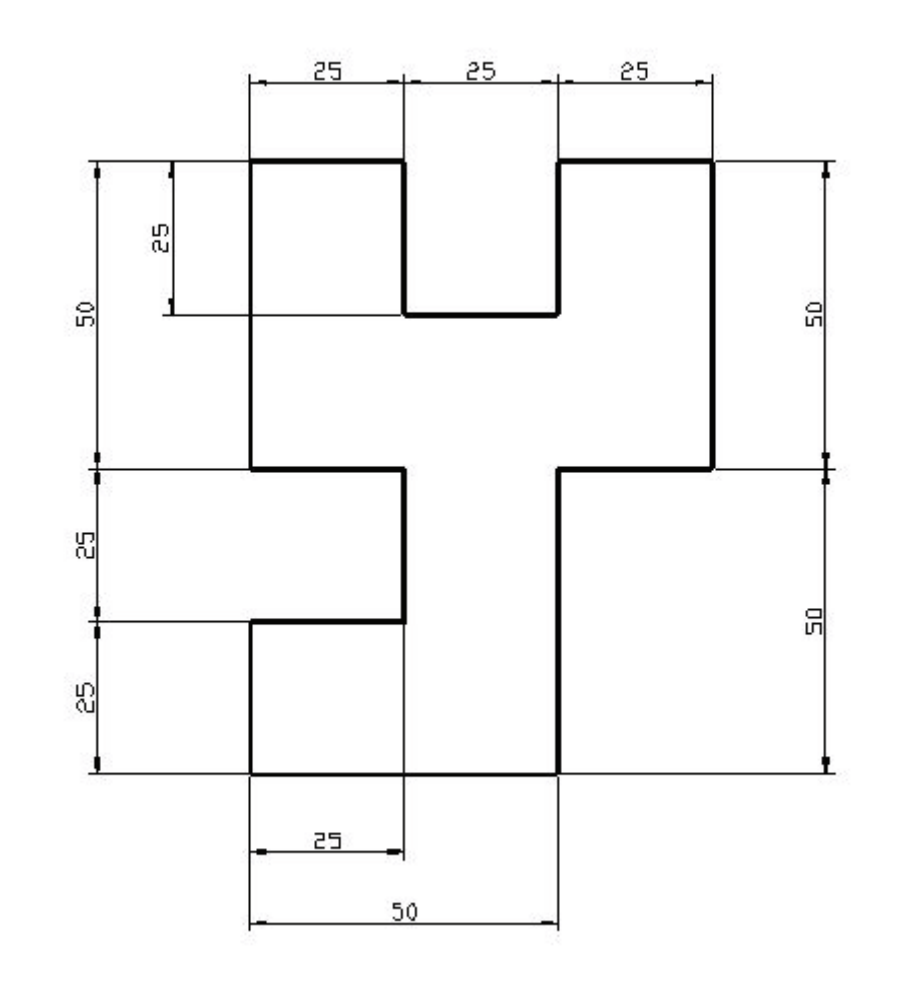

NOTE:

- If your lines look crooked, then **ORTHO** is not on, and you must begin again.
- Try to draw the entire object without starting or stopping the line segment.

Command Exercise - Line

Estimated time to completion: 5 minutes

Drawing Name: `line 2.dwg`

Scope:

Open `line 2.dwg` and draw the object shown by adding the missing lines and turning **ORTHO** Off. When you are finished, press <Enter>↵ (with a blank command line to repeat the Line command). Press <Enter>↵ again to see that the new segment will start from the end of the last segment drawn.

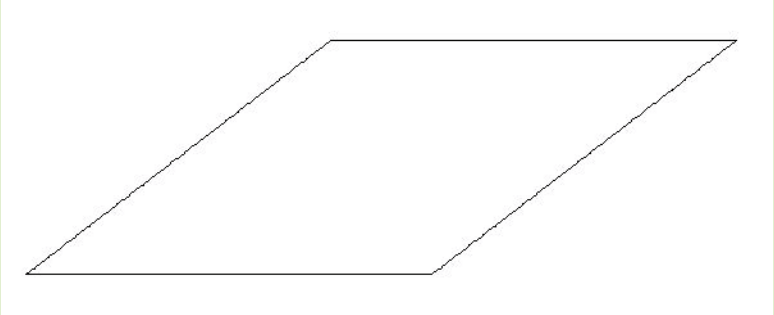

TIP:

- After completing the first line segment, you must end the **Line** command by pressing <Enter>↵ and repeat the **Line** command to draw the second line segment.

Delete Command

Command Access

Toolbar Menu	Modify / Delete
Pull-Down Menu	Modify>Delete
Command	Delete
Alias	Del
Dialog Box	

Command Overview

Delete removes selected entities. Press <Enter>↵ after selecting the objects to delete to execute the command. Type **UNDELETE** to bring back the last set of deleted entities, even if other entities were created since the last delete.

General Procedure

1 Select the **Delete** icon on the Modify toolbar, or type **DEL** at the command prompt.
2 Select the entities to remove.
3 Press the <Enter>↵ key.

TIP:

- If the cursor is not on an entity when you select it, the selection window will appear. Mark the opposite corner of the selection window to make the selection.
- A selection window made from the left to the right will select only the objects completely in the window.
- A selection window made from the right to the left will select all entities that the window crosses.
- Typing **All** (and pressing <Enter>↵) will select all of the objects in the drawing to delete. Press <Enter>↵ again to execute the command.
- With a blank command prompt you can select the entities you wish to delete (the EntityGrips will display) and pressing the **Delete** key on the keyboard will also delete your entities.

Command Exercise - Delete

Estimated time to completion: 5 minutes

Drawing Name: `delete1.dwg`

Scope:

Delete the entities in the drawing. Draw more lines. Type **UNDELETE** to bring back the last set of erased entities.

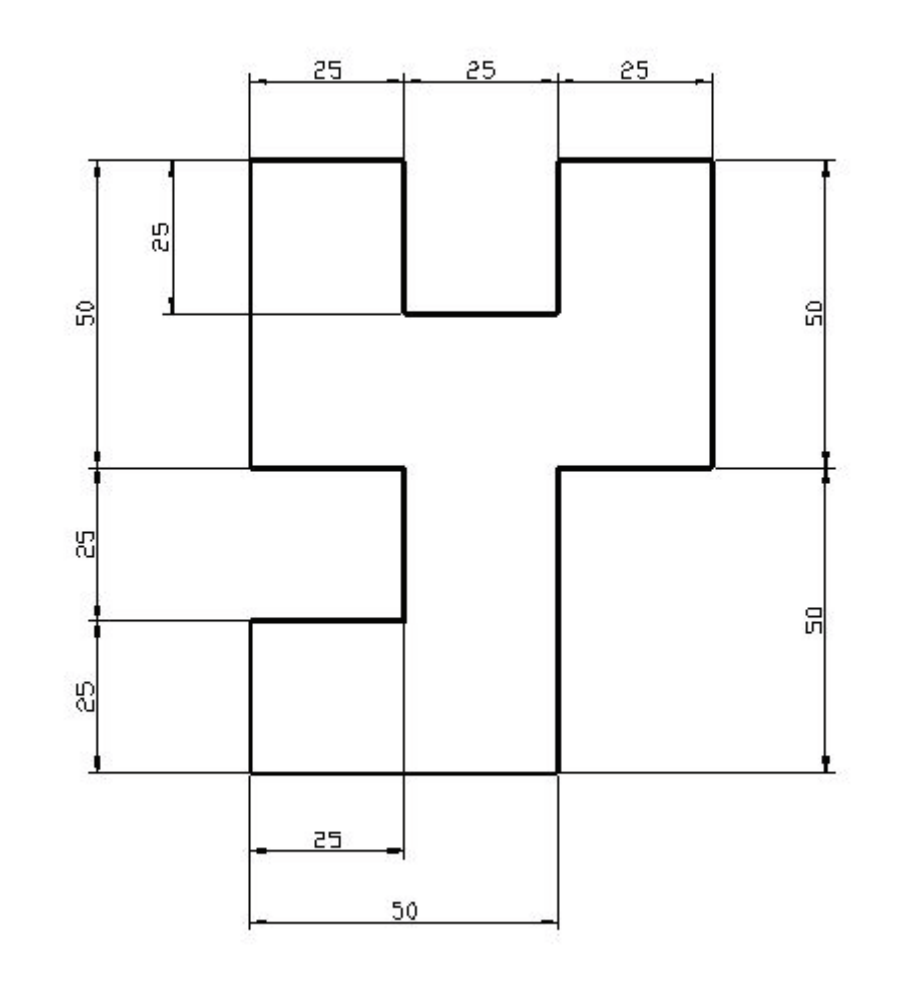

TIP:

- Select all of the entities to delete, then press <Enter>↵ to **execute** the command. To remove an entity from the selection set, hold down the Shift key and select the entity. The entity will be removed from the selection set.

Command Exercise - Delete

Estimated time to completion: 5 minutes.

Drawing Name: `Delete 2.dwg`

Scope:

Delete the entities in the drawing. Draw more lines. Type **UNDELETE** to bring back the last set of erased entities.

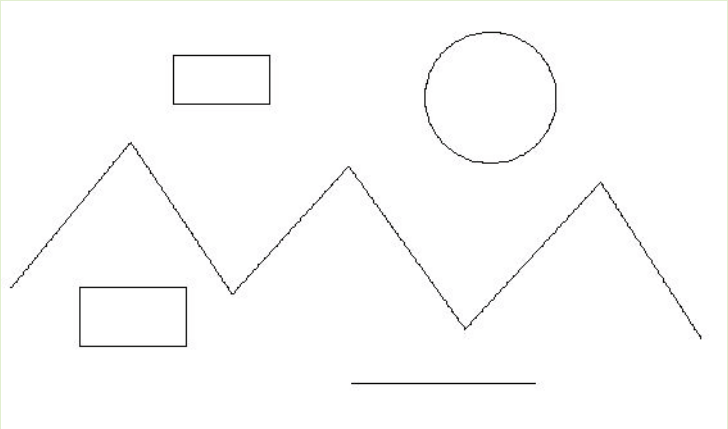

TIP:

- Be sure to turn SNAP **Off** in order to select the entities.
- The **UNDELETE** command will bring back the last set of deleted entities. **Undo** and **Redo** can also be used.

Rectangle

Command Access

Toolbar Menu	Draw / Rectangle
Pull-Down Menu	Draw>Rectangle
Command Line	Rectangle
Alias	REC
Dialog Box	

Command Overview

Rectangles are polylines. All of the line segments are connected. Draw rectangles by specifying opposite corners.

General Procedure

Draw rectangles by picking opposite corners:

1. Click the rectangle icon on the Draw toolbar.
2. Pick the first corner.
3. Drag the mouse and pick the opposite corner.

To draw rectangles using coordinates:

1. Click the rectangle icon on the Draw toolbar
2. Select a start position.
3. Specify the `relative coordinates` of the rectangle. Type the `@` symbol followed by the `x value` and `y value` separated by a comma (`@20,30`).

TIP:

- Use the **Rectangle** command rather than drawing four separate line segments. This is quicker and more efficient since a rectangle is a polyline.

Command Exercise - Rectangle

Estimated time to completion: 5 minutes.

Drawing Name: `None` (start from scratch)

Scope:

Draw rectangles as they are shown in this example. *DO NOT INCLUDE DIMENSIONS.* (Note the inner rectangles are random sizes).

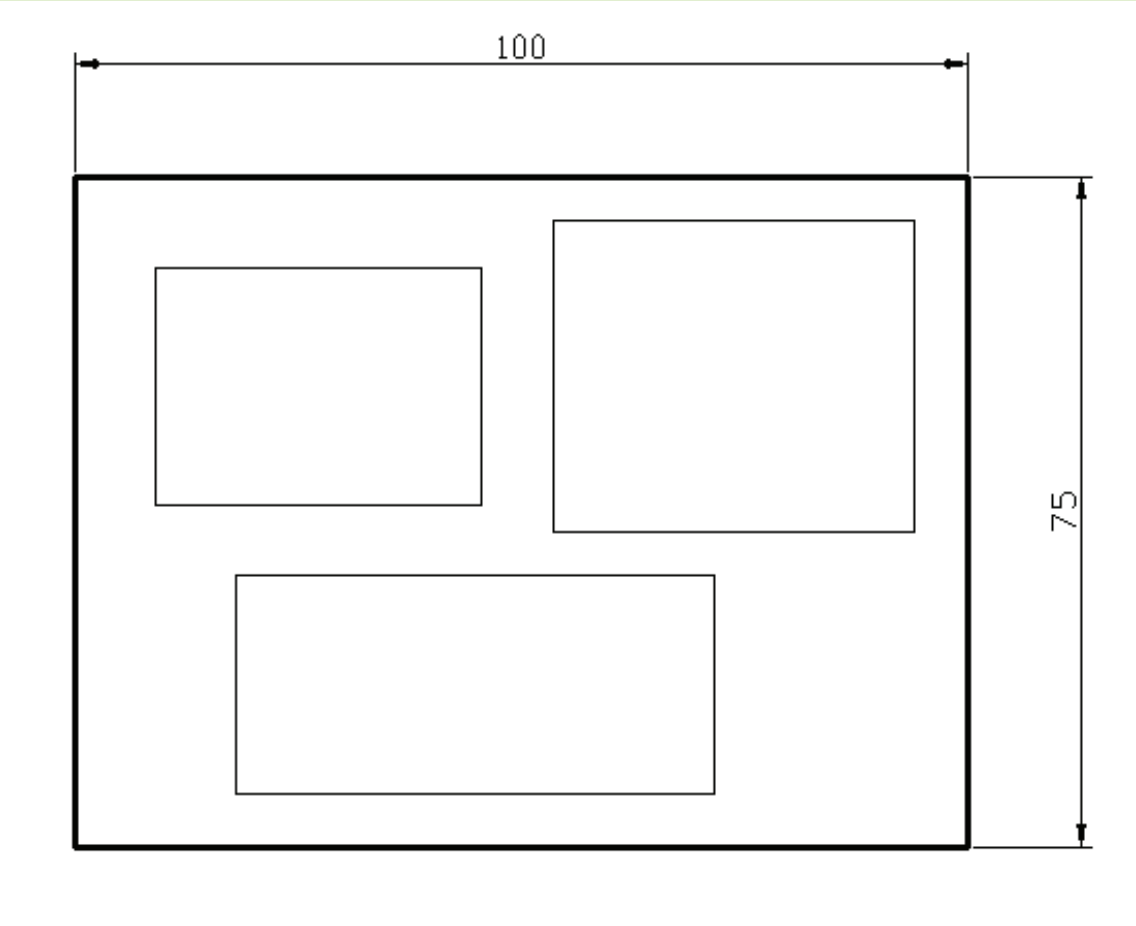

NOTE: You can toggle **Snap On** and **Off** during the command. Try it.

Circle

Command Access

Toolbar Menu	Draw / Circle
Pull-Down Menu	Draw>Circle>Options
Command	Circle
Alias	C
Dialog Box	

Command Overview

There are several ways to draw a **Circle**. The most common way is to pick the center point, then designate a radius. Right-click to view the shortcut menu for options. If a center point is selected first, the Short cut menu option for **Circle** is **Diameter**. If no center point is selected, the Short-cut menu will display other options.

Circle Options	Overview
Radius / Diameter	If a center point is selected, type or pick the radius. Right-click to select the Diameter option or type D and <Enter>.
3P	Draws a circle by selecting three points on the circumference of circle.
2P	Draws a circle by selecting two points to define a diameter.
TTR	Draws a circle by selecting two tangent entities and a specified radius.
Tan, Tan, Tan	Draws a circle by selecting three tangent entities.

General Procedure

1. Click the **Circle** icon on the Draw toolbar.
2. Pick a center point.
3. Type the `radius` or type **D** to specify a `diameter`.

TIP:

- To make a circle the same size as the previous circle, press <Enter>↵ to accept the default value for the radius.
- When selecting a circle entity to delete, you must select the circumference.

Command Exercise - Circle

Estimated time to completion: 10 minutes

Drawing Name: `circle 1.dwg`

Scope:

Draw the large circle using the **TTT** option. The three inner circles are random size. Use the center point function to create the 80 mm diameter circle using the Diameter option of the Circle command.

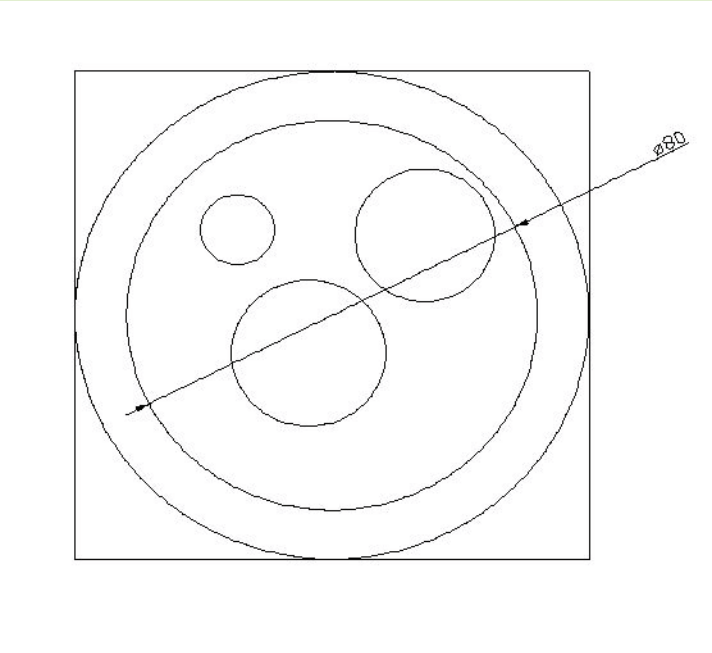

TIP:

- DraftSight remembers the value of the radius for the last circle drawn. If you start the **Circle** command by typing **Circle**, you can enter the radius by default.
- If you want to specify the diameter, you need to use the **D** option and press <Enter>↵ after you have selected the center of the circle.

Drafting Settings

Command Access

Toolbar Menu	
Pull-Down Menu	Tools>Options>User Preferences>Drafting Options>...
Command	Options
Alias	OP
Dialog Box	Options - User Preferences

Command Overview

The following options are covered in the Drafting Settings:

- Snap and Grid
- Polar Tracking
- ESnap Settings
- ETracking

Click the icon on the Status Bar to turn these functions **On** and **Off**. Use the Right Mouse button on top of the icon to change the setting.

Snap

When Snap is **On**, selecting points in the drawing window will be restricted to the snap increments. Typically the X and Y spacing is the same, and the snap angle is 0.

Grid

The Grid is a lattice-point pattern that is visual in the file. The grid is not printed.

General Procedure

1. Open the **User Preferences** tab in the **Options** dialog box and expand **Drafting Options**.
2. Under **Pointer Control** expand the **Snap Settings** options and set the **Snap Spacing**.
3. Under **Display** expand **Grid Settings** and set the **Grid Options**.

TIP:

- Working with **Snap On** is handy when laying out a drawing, drawing a title block or creating a table, such as a bill of materials.
- Working with **Snap On** is not handy in most other instances.
- It is more convenient to use toggle switches on the Status Bar to turn Snap and Grid **On** or **Off** rather than from the dialog box.
- The function key for Grid is **F7** and for Snap is **F9.**

Polar Snap

Polar Snap works independently from Snap. With Polar Snap turned **On**, incremental angle will be displayed as the line being dragged approaches that angle. Set the incremental angle in the **User Preferences** tab of the **Options** dialog box.

General Procedure

1. Right-click on Polar in the Status Bar and select Settings to open the **User Preference** tab of the **Options** dialog box, with **Drafting Options**>**Display**>**Polar Guides** expanded.
2. Choose the desired **Incremental Angle** for **Polar** display from the drop-down box, or specify a value that is not listed in the **Display Polar Guides at specific angle(s)** option.
3. **Enable Polar guides** and **Display Polar guides** should be selected.
4. Use the **Line** command, pick the first point, and then drag the line to see the Polar Guide displayed.

TIP:

- With the desired polar angle displayed, type the length of the line and press the <Enter>↵ key.

Object Snap

When Object Snap mode is selected, and a (Draw or Modify) command has been invoked, the Esnap will be displayed as the cursor moves over an entity. The cursor will want to *snap* to that point. If the cursor is held over that snap point, the label will display the snap mode. Once the cursor is moved away from that point, the Entity Snap will no longer be displayed or selected. Toggle the ESnap settings **On** or **Off** from the Status Bar.

General Procedure

1. Right-click on the ESnap button from the Status Bar and select **Settings**... to open the **User Preferences** tab of the **Options** dialog box and expand the **Pointer Control**>**EntitySnaps** section.
2. Choose the desired EntitySnap Settings.
3. Click **OK** from the dialog box.

TIP:

- ESnap settings, when selected, will remain consistant, or *running,* if ESnap is **On**. Entity Snap options can be selected individually using the EntitySnap toolbar, or by using the **Shift+Right Mouse Button** Shortcut menu.
- Do not check all of the EntitySnap modes in the dialog box. This will make selecting entities tedious and no longer a handy tool.
- When no EntitySnap modes have been selected (clear all), clicking the ESnap button on the Status bar will open the EntitySnaps settings dialog box.

Entity Track

Entity Tracking will display orthogonal (horizontal and vertical) tracking guides when the cursor moves over an Entity Snap point (ESnap must be enabled).

General Procedure

1. Right-click on the ETrack button from the Status Bar and select **Settings**... to open the **User Preferences** tab of the **Options** dialog box and expand **Drafting Options**>**Display**>**ETrack**.
2. Choose **Display ETrack across Screen** and **Enable Shift to acquire reference points**.
3. Select **OK** from the dialog box.

TIP:

- Use ETracking for quick geometry construction using ESnap points.
- Be sure to verify the dimensions used with this method.

Command Exercise - Entity Tracking

Estimated time to completion: 15 minutes

Drawing Name: `None` (start from scratch)

Scope:

Set up ESnap points. Set Polar Guides to 45 degrees and turn ETrack **On**. Create the shape below. *DO NOT ADD DIMENSIONS.*

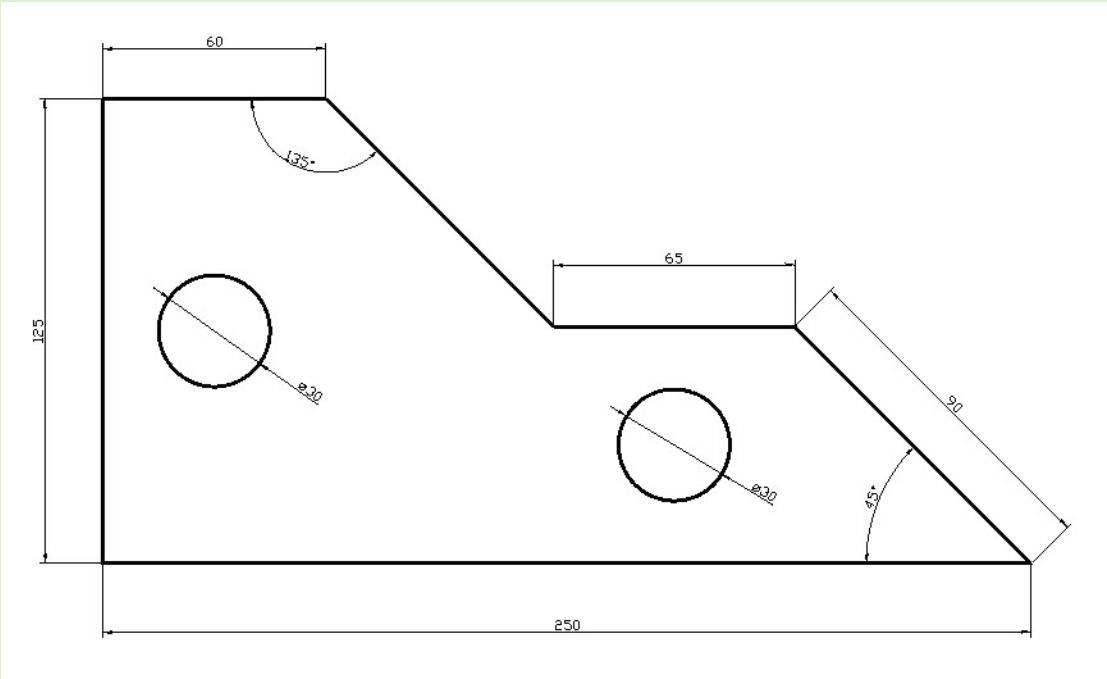

TIP:

- Use the right side of the top 60 mm horizontal line as the start point.
- Use the **C** option of the **Line** command to finish the outline shape.
- Using ETrack, the center of the left circle is the midpoint of the 60 mm horizontal line and the midpoint of the 125 mm vertical line.
- Using ETrack, the center of the right circle is the midpoint of the 65 mm horizontal line and the midpoint of the 90 mm diagonal line.
- Hold the Shift key down and move the cursor over the ETrack points to *wake up* the points that you wish to use for the construction of the circle.

Command Exercise - Entity Snap

Estimated time to completion: 10 minutes

Drawing Name: `esnap 1.dwg`

Scope:

Set ESnap points for End Point, Quadrant Point, Intersection Point and Mid Point. Using the geometry in the file, construct the following drawing. For the circles in the corners, use a diameter of 20.

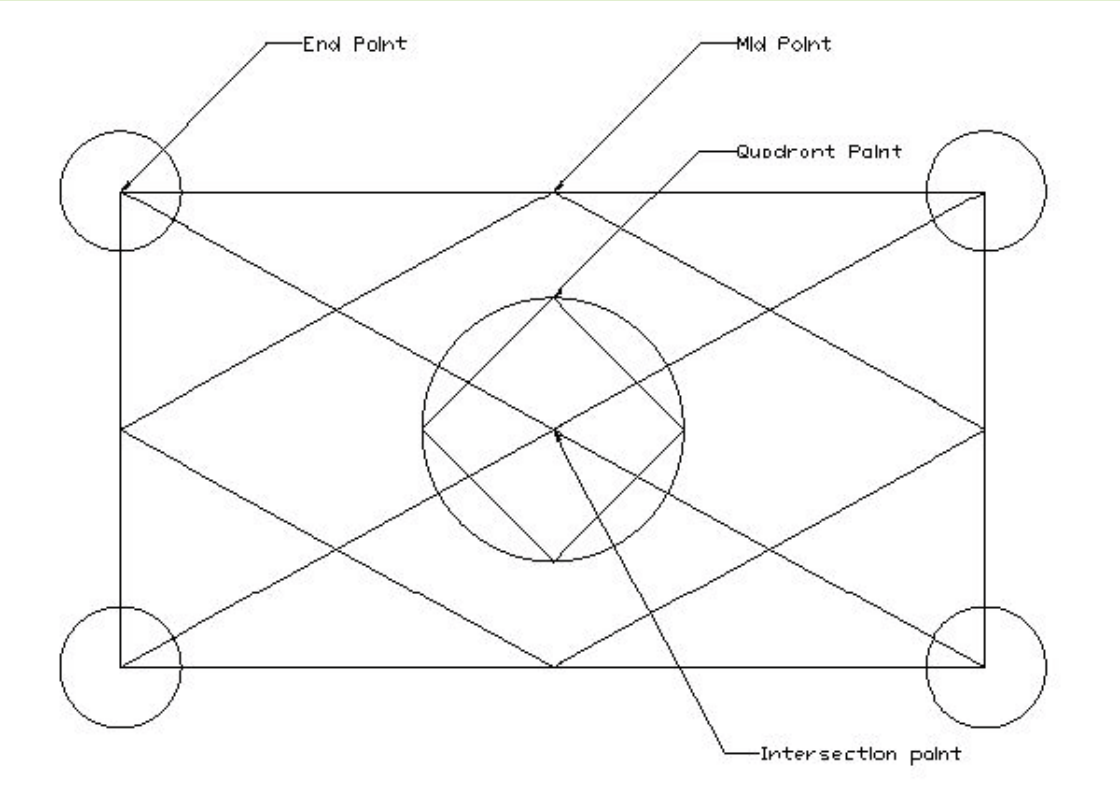

NOTE:

- Try creating this with ESnap **Off** and use the **Shift+Right Mouse Button** option.

TIP:

- The Entity Snap symbols help to indicate where the selection point will be placed.

Command Exercise - Entity Snap

Estimated time to completion: 5 minutes

Drawing Name: `esnap 2.dwg`

Scope:

Using the current ESnap settings, open the file and complete the geometry. Be sure to use the **Shift+Right Mouse Button** in order to complete the exercise.

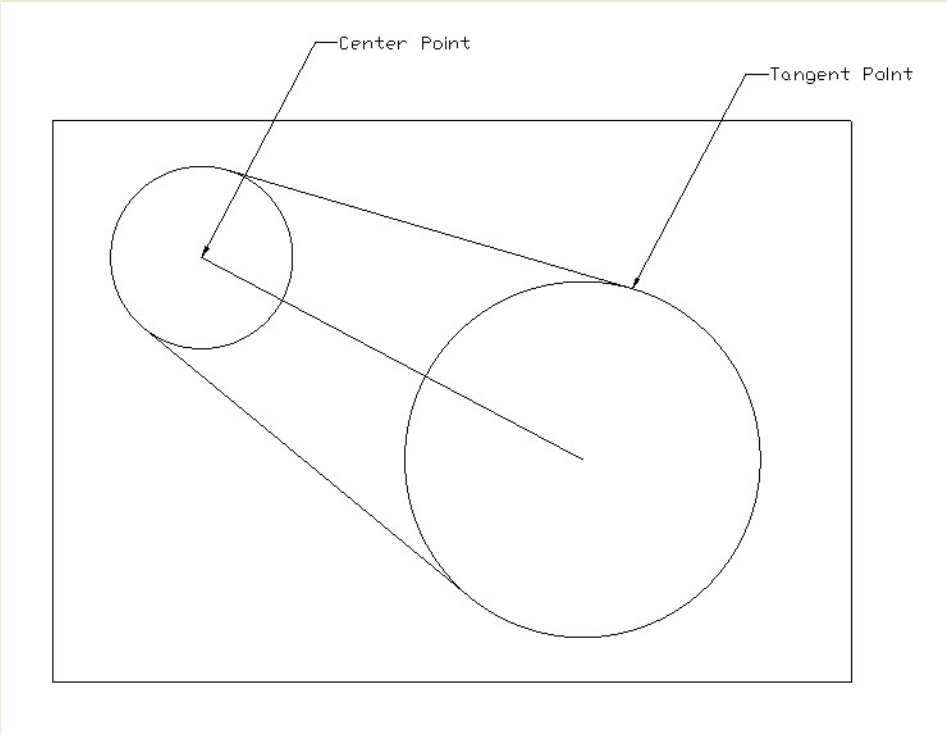

TIP:

- When selecting a center point, be sure to select the circumference of the circle.
- Make sure to observe the ESnap cue when using the Tangent Point option to ensure that you choose the proper point.

Command Exercise - Entity Snap

Estimated time for completion: 5 minutes.

Drawing Name: `esnap 3.dwg`

Scope:

Using the current ESnap settings, open the file and complete the geometry. Be sure to use the **Shift+Right Mouse Button** option (Use Intersection) in order to complete the exercise.

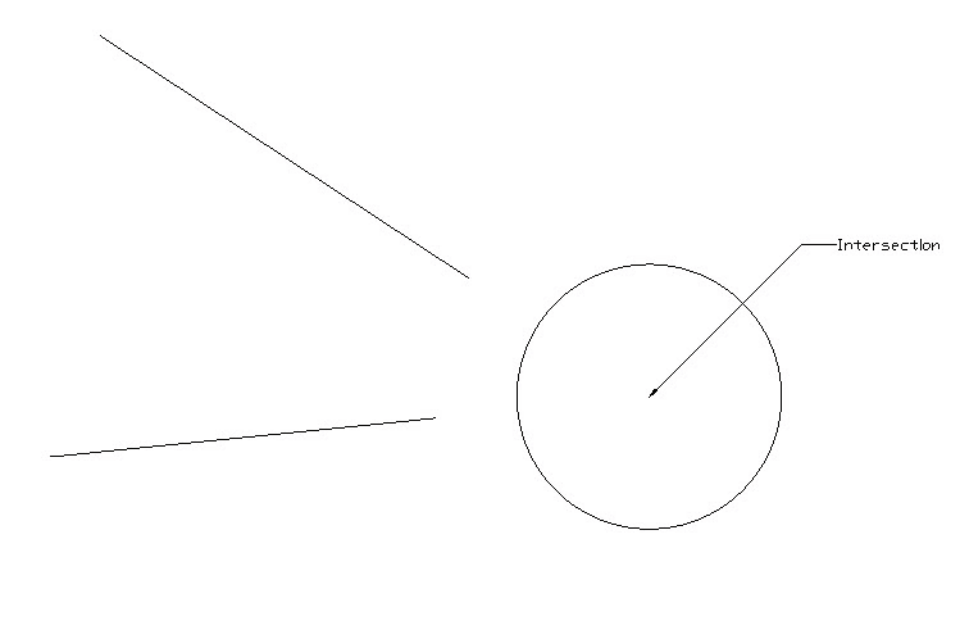

TIP:

- To use the Intersection option, after selecting the **Circle** icon, choose **Shift+Right Mouse Button** and select Intersection. Select the first line, and then select the second line. This will start your circle at the point where the two lines would intersect if the extended.

Arc

Command Access

Toolbar Menu	Draw / Arc
Pull-Down Menu	Draw>Arc>Options...
Command	Arc
Alias	A
Dialog Box	

Command Overview

Though there are many **Arc** options available, we will look at the following **Arc** options: **3 Points**, **Start, Center, End** and **Start, Radius, End**. These **Arc** options will work in most instances.

Click the **Arc** icon on the Draw toolbar or by typing `Arc` at the command line. This will draw a three-point arc through three consecutive points. Other Arc options can be selected through the pull-down menu. Arcs are constructed in a counter clockwise direction, except when constructing a three-point arc.

General Procedure

1. Select the **Arc** icon on the Draw toolbar to draw a three-point arc or select one of the options from the Draw pull-down menu.
2. Follow the command prompts.
3. Use the right mouse button with the cursor in the graphics area to repeat the **Arc** command.

TIP:

- Arcs are constructed in a counter clockwise direction, except when drawing a three-point arc.
- Pressing the right mouse button will repeat the **Arc** command, but instead of the same command, it will be the generic three-point arc.

Command Exercise - Arc

Estimated time to completion: 10 minutes

Drawing Name: `arc 1.dwg`

Scope:

Draw the object shown using the appropriate **Arc** and Entity Snap options.

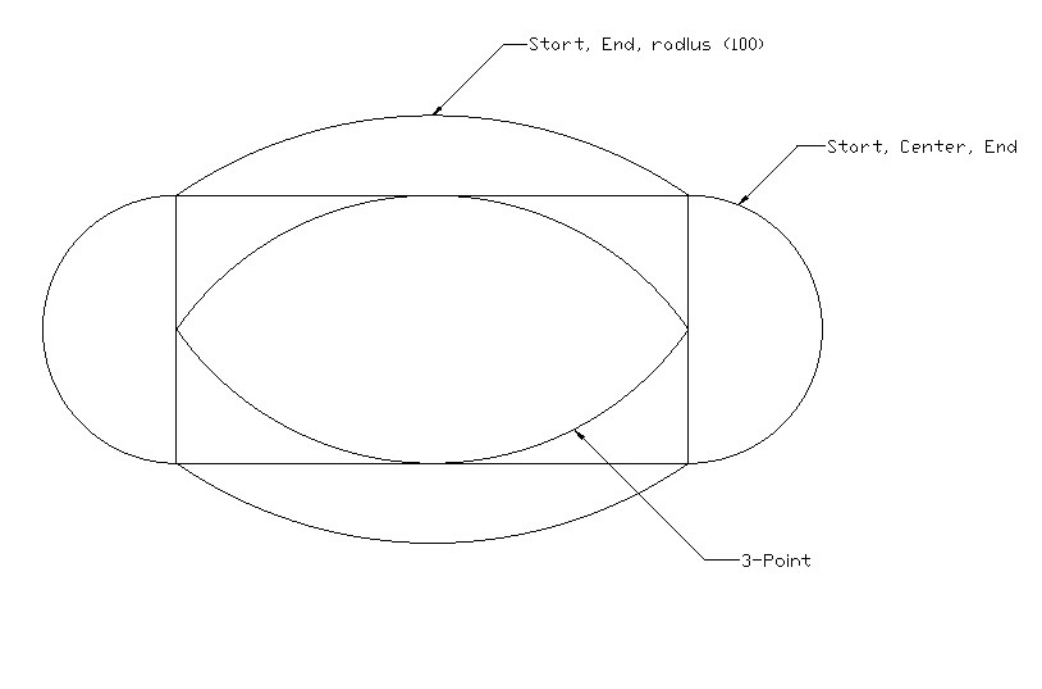

NOTE:

- Notice how the arcs were created in a counter clockwise direction. What happens if they are created in a clockwise fashion? Try it.

Undo and Redo

Command Access

Toolbar Menu	Standard / Undo - Standard / Redo
Pull-Down Menu	Edit>Undo - Edit>Redo
Command	Undo - Redo
Alias	U (none for Redo)
Dialog Box	

Command Overview

Type **U** or select the **Undo** icon on the Standard Toolbar. This feature will reverse the previous command. You can use undo to remove all of the actions performed in the current drawing file from the time it was opened.

General Procedure

1. Select the **Undo** icon, or type **U** and ↵ at the command prompt.
2. Press ↵ to repeat the **Undo** command until satisfied.

TIP: Be careful not to press ↵ too many times.

Command Exercise - Undo / Redo

Estimated time to completion: 5 minutes

Drawing Name: `None` (start from scratch)

Scope:

Draw several **Lines**, **Circles** and **Rectangles**. Undo your drawing several steps back. Use the **Redo** command and try to redo several steps.

Polygon

Command Access

Toolbar Menu	Draw / Polygon
Pull-Down Menu	Draw>Polygon
Command	Polygon
Alias	PGON
Dialog Box	

Command Overview

Polygons are polylines with equal line segments. First determine the number of sides for the polygon, and then select a center point. A polygon may be constructed with either the **Corner** or **Side** option. Typing or selecting the radius will determine the size of the polygon. If you choose the **Corner** option, the polygon will fit inside the specified radius. If you choose the **Side** option, the specified radius will fit inside the polygon. It is also possible to construct a polygon with a given Side Length.

General Procedure

1. Select the **Polygon** icon on the Draw toolbar.
2. Type the number of sides and press ↵.
3. Select the center point of the polygon.
4. Determine whether to use the **Corner** or **Side** option.
5. Specify the radius.

TIP:

- After specifying the number of sides to the polygon, type **S** for Side Length, to specify the length and direction of the polygon's edge.
- There is no Polygon Center Entity Snap point. Use ETrack, or create construction lines to locate the center of a polygon one it has been created.

Command Exercise - Polygon

Estimated time to completion: 5 minutes

Drawing Name: `None` (start from scratch)

Scope:

Practice the options for drawing a polygon:

1. Draw a six-sided polygon making the overall radius 50, using the **Side** option.
2. Draw a six-sided polygon making the overall radius 50, using the **Corner** option.
3. Draw a six-sided polygon using the **Side length** option, with a length of 25. Notice that the angle of the polygon is determined by the cursor as it is dragged from the first pick point.

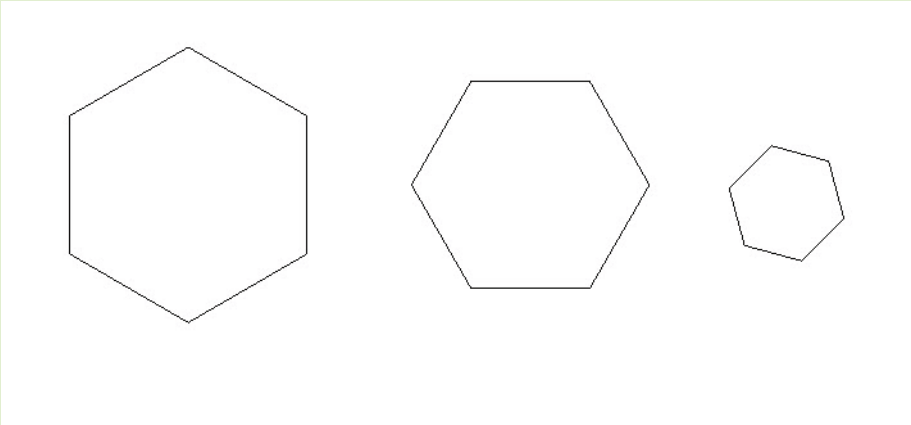

Drawing Setup

Command Overview

Creating Lines, Circles and Arcs is only one feature of the drawing in DraftSight. This tutorial will cover other topics related to the drawing setup. The following steps can be used as a guide for beginning a drawing. Once the settings have been established, the drawing can be used as a template for other drawings.

General Procedure

1. Begin a new drawing. Select the **New** icon on the Standard Toolbar.
2. Choose the appropriate template.
3. Choose the drawing units. Specify the units and the precision of these units. Set the angle of measurement, and the precision of the angles in the **Drawing Settings** tab of the **Options** dialog box under **Unit System.**
4. Specify the Drawing Boundary. Specify how large the drawing area should be based on the actual size of the objects being drawn in the **Drawing Settings** tab of the **Options** dialog under **Behavior**>**Drawing Boundary**. The drawing boundary should always be a little bigger then all of the entities.
5. **Zoom Bounds**. Always perform the **Zoom Bounds** command after changing the **Drawing Boundary** setting, so the entire work area is visible.
6. Set **Snap** and **Grid** spacing. Set the X and Y spacing for **Snap** and **Grid** according to the Drawing Boundary. For larger drawings, space the snap and grid accordingly. If the grid is too dense, it will not display. When the Grid is **On** and the spacing is correct, it will display within the drawing boundary.
7. Create **Layers**. Create a system of layers to organize your drawing. Assign a **Name**, **Color** and **LineStyle** to each layer.
8. Specify **Line Scale**. This is a global setting that determines the scale of the **LineStyles** in the drawing. If the drawing is to be printed full scale, then a factor of 1 is appropriate. If the file is to be plotted at $1/10^{th}$, then 10 is appropriate.
9. Create **Text Styles**. Create a few **Text Styles** for your drawing. Each style can be assigned a **Name**, a **Font** and a predetermined **Height**.
10. Create **Dimension Styles**. Create multiple Dimension Styles based on the Standard Style. Choose the arrowhead type, the dimension units, precision and dual dimension style.
11. Save this as a drawing template. Save as (`.dwt`)

Section 2 Exercise - Standard Bracket

Estimated Time to Completion: 15 Minutes

Drawing name: `None` (start from scratch)

Scope:

Use the commands you learned in the last section to create the three-view orthographic drawing of the bracket in the figure below. Do not worry about the title block, drawing dimensions or hidden lines. Try to place the polygon and circle in the middle of the upper and lower plates. Remember to use the most efficient commands.

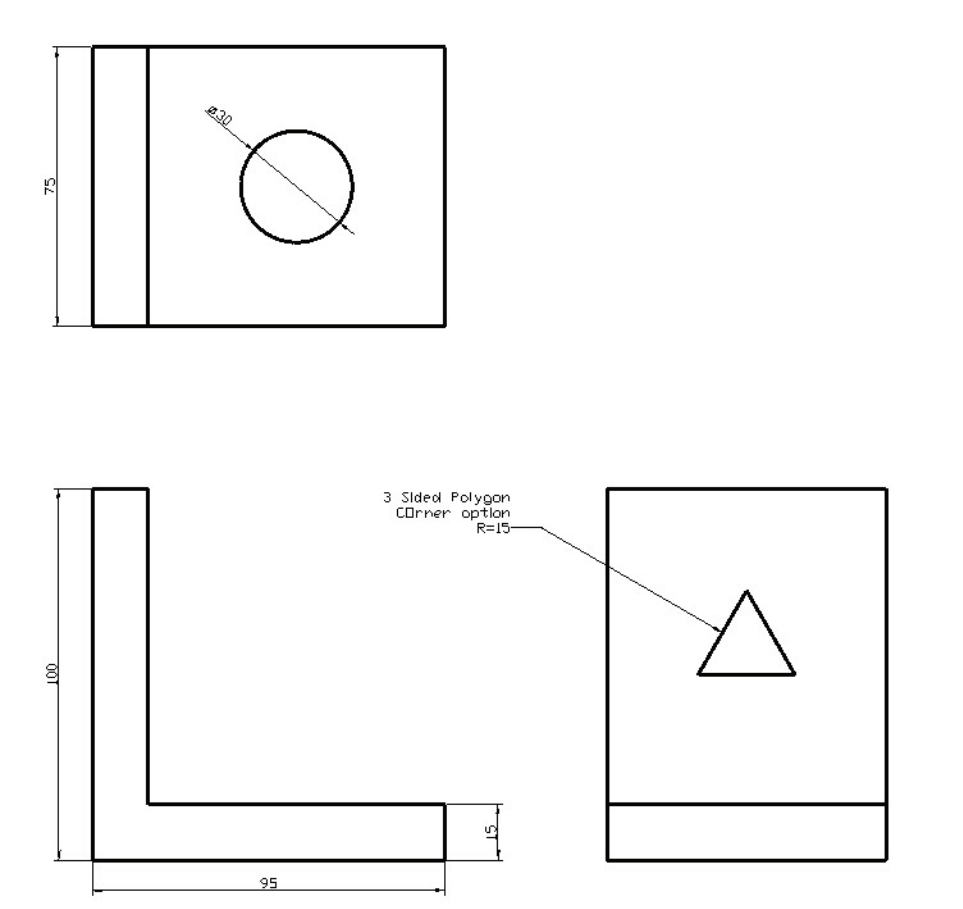

TIP:

- Start by setting the Endpoint, Midpoint, Intersection and Quadrant Entity Snaps. Turn ETrack **On**.
- Try to use the **Line** and **Rectangle** commands to create the overall geometry. Try the **Polygon** command to create the triangle, and the **Circle** command to make the hole.
- Use the **Ortho** mode to create the vertical and horizontal lines.

Section 2 Exercise - Simple House

Estimated time to completion: 15 minutes

Drawing name: `None` (start from scratch)

Scope:

Using the commands learned in this section, draw this simplified house.

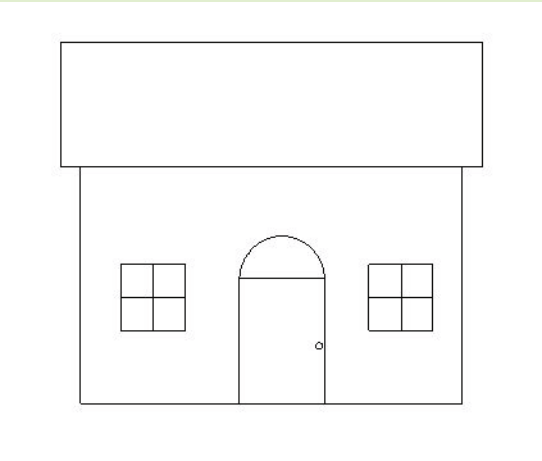

TIP:

Use the R**ectangle** command for basic shapes.
Use L**ines** with Midpoint EntitySnaps for the window frames.
Draw extra shapes with the P**olygon** command and then delete them.

Section 2 Review Questions

1 Identify the following icons by writing the command and the toolbars where they can be found:.

	Icon	Command	Toolbar
a.			
b.			
c.			
d.			
e.			
f.			
g.			
h.			

2 Identify the following EntitySnap options.

	Icon	Option
a.		
b.		
c.		
d.		
e.		
f.		
g.		

3 How can you access an EntitySnap option for a single selection (Not ESnap)?

4 What control in the Status Bar turns the EntitySnap **On** and **Off**?

5 What does the **DraftingOptions** command do?

___Invokes the EntitySnap dialog box

___Allows you to adjust the ETrack settings

___Toggles the ESnap command ON and OFF

___Nothing

6 How would you select the exact center of a circle? How would you select the exact center of a six or four or three sided polygon? Try it.

Section 3
Coordinates

Estimated Class Time: 2 hours

Objectives

DraftSight uses the Cartesian Coordinate System for drawing models. The world orientation means positive X progresses to the right and positive Y moves up.

The user is also looking down the Z axis. The view plane is the same as the work plane. Since we will focus only on the two-dimensional capabilities of DraftSight, it will not be necessary to use the Z coordinates.

After selecting the Drawing Units, it is good practice to establish the Drawing Boundaries, or work area. Adjusting the Drafting Settings will also make it easier to work on the drawing.

There are four ways to specify coordinates:

- Absolute Coordinates
- Relative Coordinates
- Polar Coordinates
- Direct Distance.

Although the Direct Distance method of drawing will be used most of the time, it is equally valuable to learn the other methods to input coordinates.

- **Coordinate System**

The working environment for DraftSight is the Cartesian Coordinate System.

- **Units**

The user determines the type of drawing units.

- **CCS**

The Custom Coordinate System icon shows the orientation of the X and Y axis.

- **Inquiry**

Find the Get Distance, Get Area, Get Coordinates and Properties of selected entities.

- **Coordinate Entry**

There are several methods for entering coordinates when drawing.

- **Snap from EntitySnap**

The Snap From option with EntitySnap references a selected point.

- **Drawing Boundaries**

Drawing Boundaries put a boundary on an otherwise limitless workspace.

- **Drawing Boundaries and Scale for Architectural Drawing**

Use this handy chart for setting up an architectural drawing in model space.

Coordinate System

Command Overview

DraftSight uses the Cartesian coordinate system for drawing models. The world orientation means positive X progresses to the right and positive Y moves up.

The user is also looking down the Z axis. The view plane is the same as the work plane. Since we will focus only on the two-dimensional capabilities of DraftSight, it will not be necessary to use the Z coordinates.

General Procedure

1 Type **CCS** at the command prompt and press ↵.
2 Press ↵ to accept the default **World.**

TIP:

- Positive X moves from left to right and positive Y moves up.
- This orientation is sometimes referred to as the *right-hand rule*.
- When coordinates are displayed or typed, the X coordinate comes first (separated by a comma), then the Y.

CCS Icon

Command Access

Toolbar Menu	CCS
Pull-Down Menu	Tools>New CCS
Command	CCS
Alias	
Dialog Box	

Command Overview

The **CCS** icon 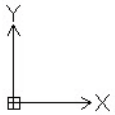

displays the orientation of the X and Y coordinates of the User Coordinate System, or work plane. The icon signifies the default work plane, with an origin of 0,0, known as the **World**. The default location of the **CCS** icon is at the origin.

General Procedure

1 Select **View**>**Displa**y>**CCS Icon** from the pull-down menu.
2 There should be a checkmark before **On** and **Origin**.

TIP:

- For all practical purposes, it is best to leave the **CCS** icon on, but not at the origin.
- Keeping the **CCS** icon not at the origin will keep it in the lower left-hand corner and usually out of the way. It will also be a reminder that the orientation is correct.
- In the event the **CCS** icon should be changed to something other than **World**, Type **CCS** and press ↵, then press ↵ to accept the default **World**.

Inquiry

Command Access

Toolbar Menu	Inquiry
Pull-Down Menu	Tools>Inquiry>Option
Command	GetDistance - GetArea - GetProperties - GetXY
Alias	
Dialog Box	

Command Overview

Information can be obtained by using a specific **Inquiry** tool.

General Procedure

To obtain a **Distance**:

1 Click **Tools**>**Inquiry**>**Get Distance** from the pull-down menu.
2 Using Entity Snap, select two specific points in the drawing.

To obtain an **Area**:

1 Click **Tools**>**Inquiry**>**Get Area** from the pull-down menu.
2 Using Entity Snap, select the points defining the object, or if the object is a closed polyline with all of the entities connected, type **E** for **Entity** and select the polyline.

To get the Properties of an entity:

3 Click **Tools**>**Inquiry**>**Get Properties** from the pull-down menu.
4 Select the entity for **Properties**.

To get the coordinates of a selected point:

1 Click **Tools**>**Inquiry**>**Get Coordinates** from the pull-down menu.
2 Using Entity Snap, select the point in the drawing.

TIP:

- Always use Entity Snap for selecting specific points in the drawing.
- Converting lines and arcs to closed polylines will make it easier to obtain **Area**.
- You can select multiple entities at the same time to obtain the properties.

Units

Command Access

Toolbar Menu	
Pull-Down Menu	Format>Unit System...
Command	UnitSystem
Alias	UNITS
Dialog Box	Options - Drawing Settings>Unit System

Command Overview

Set the Drawing Units, the Angle of Measurement, and the Precision in the Units dialog box. This setting is saved with the drawing. Changing the units will not affect the geometry in the drawing.

General Procedure

1. Click **Format>Units System**... from the pull-down menu.
2. Select the Type of **Drawing Units** for **Length** and **Precision.**
3. Select the Type of **Drawing Units** for **Angles** and **Precision.**

TIP:

- DraftSight is accurate to at least 14 significant decimal places (0.00000000000001). Units precision will be rounded up according to the specified precision.
- Angles are typically measured counter-clockwise. To reverse this, place a checkmark before **Clockwise**.
- Angle 0 is typically East. To change this, select the **Direction** button in the dialog box.
- **Drawing Units** and **Dimension Units** are specified separately. (See **Dimension Style.**)

Coordinate Entry

Command Overview

Once the **Units** have been established, coordinates can be typed to specify points or distances. Always draw full scale. There are four ways to specify coordinates: **Absolute**, **Relative**, **Polar** and **Direct Distance**.

General Procedure

Using Absolute Coordinates:

1. When prompted to specify a point, type the **Absolute Coordinates** for `X` and `Y` (`x,y`).
2. Type the **Absolute Coordinates** for each successive point (`x,y`).

Using Relative Coordinates:

1. When prompted to specify a point, select a point in the drawing.
2. Type the **Relative Coordinate** for each successive point (`@x,y`).

Using Polar Coordinates:

1. When prompted to specify a point, select a point in the drawing.
2. Type the **Polar Coordinates** for each successive point (`@distance<angle`).

Using Direct Distance:

1. When prompted to specify a point, select the point in the drawing.
2. Turn **Ortho On**, and drag the cursor in the desired direction.
3. Type the distance and press ↵.

TIP:

- Always use Entity Snap for selecting specific points in the drawing.
- Remember to separate the X and the Y coordinates with a comma. Example: `1,5` means the absolute coordinates are x=1, y=5
- Angles are typically measured counter clockwise. Angle 0 is typically East.
- Precede **Relative** and **Polar** coordinate information with an `@` sign.
- Ortho should be **On** when using the **Direct Distance** method.
- When drawing lines, or moving objects at specific angles (other than with Ortho **On**), type the polar coordinate (example: `@10<45`) or use the Polar Tracking settings.
- Typing the minimum number of keystrokes is important for drawing efficiency. DraftSight will fill in leading and trailing zeros and the appropriate unit ending.
- DraftSight will convert decimal equivalents to feet and inches.
- DraftSight will assume inches unless the foot mark ' is typed.

Command Exercise - Absolute Coordinates

Estimated time to completion: 5 minutes

Drawing Name: `None` (start from scratch)

Scope:

Using the **Line** command, draw the object using the **Absolute Coordinates**.

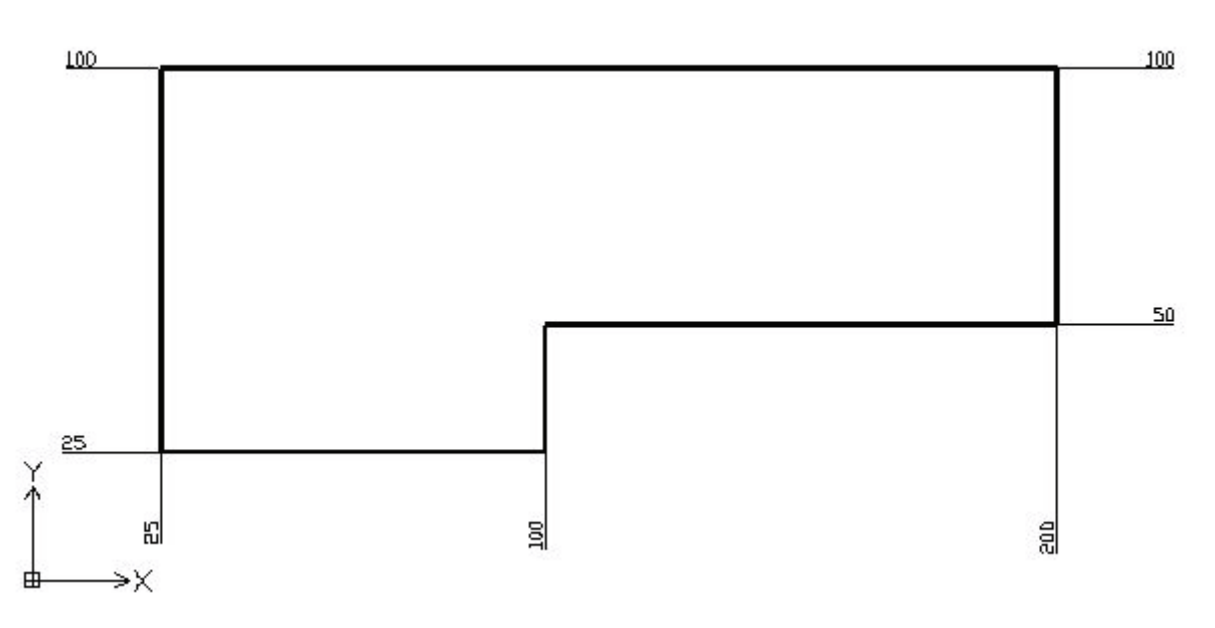

Command Exercise - Relative Coordinates

Estimated time to completion: 5 minutes

Drawing name: `None` (start from scratch)

Scope:

Using the **Line** command, draw the object using **Relative Coordinates**. Connect the points using only keyboard input.

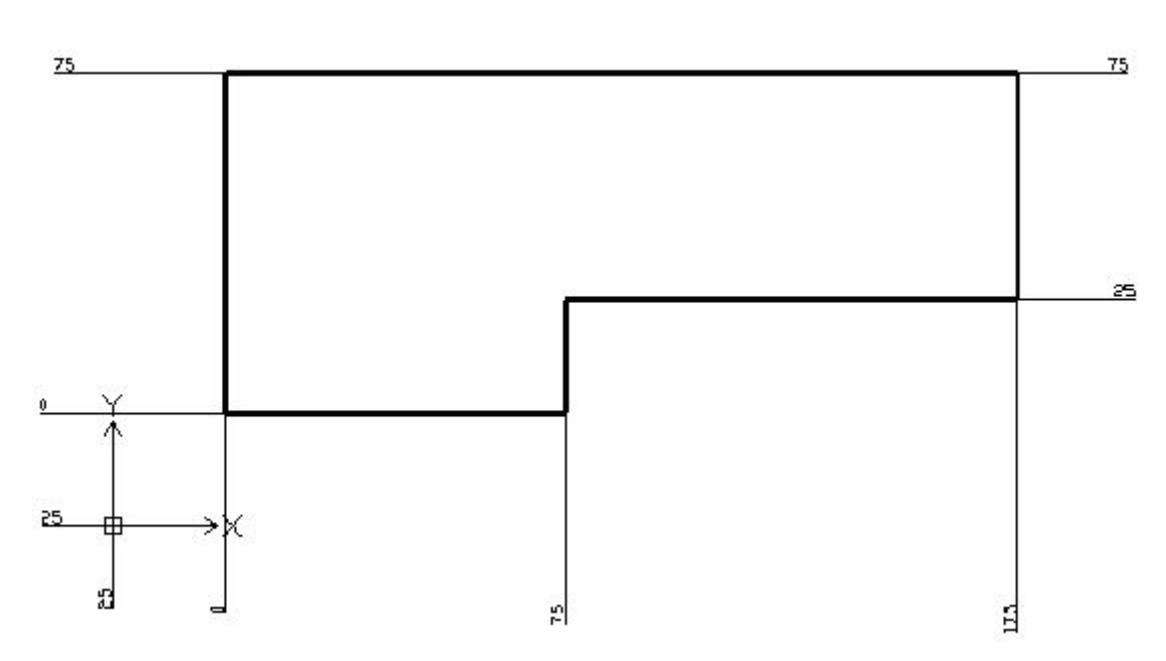

Command Exercise - Polar Coordinates

Estimated time to completion: 5 minutes

Drawing Name: `None` (start from scratch)

Scope:

Using the **Line** command, draw the object using the **Polar Coordinates**. Connect the points using only keyboard input.

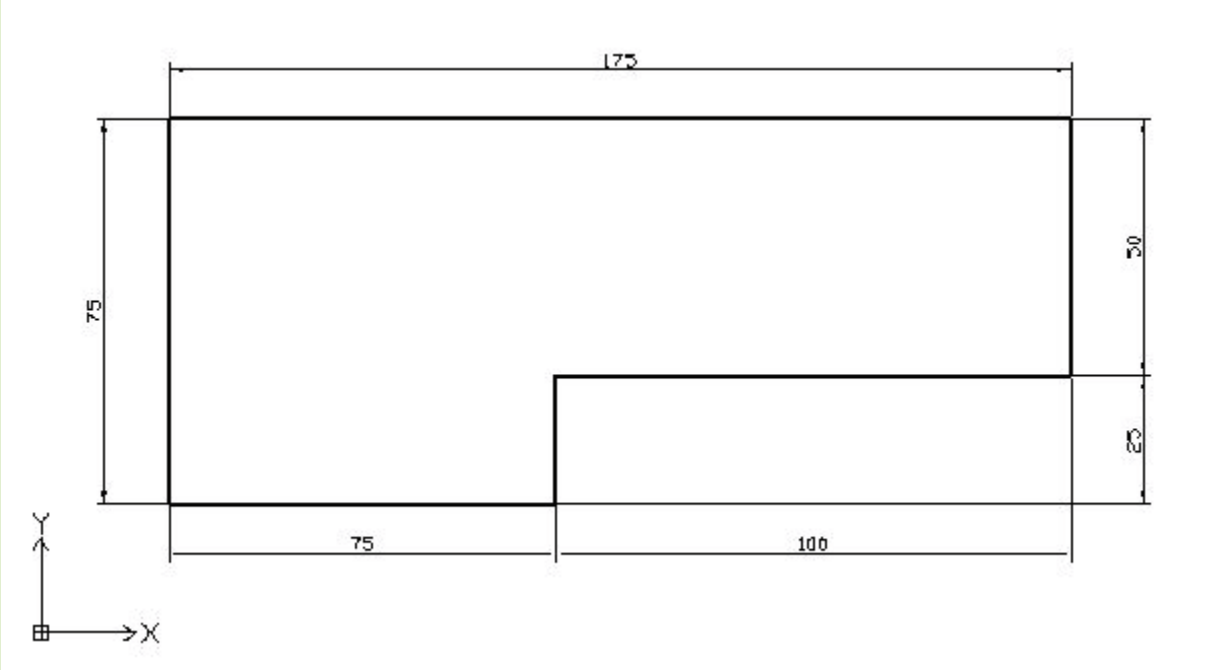

Command Exercise - Direct Distance Method

Estimated time to completion: 5 minutes

Drawing Name: `None` (start from scratch)

Scope:

Using the **Line** command, draw the object using the **Direct Distance** method. Connect the points using onlykeyboard input.

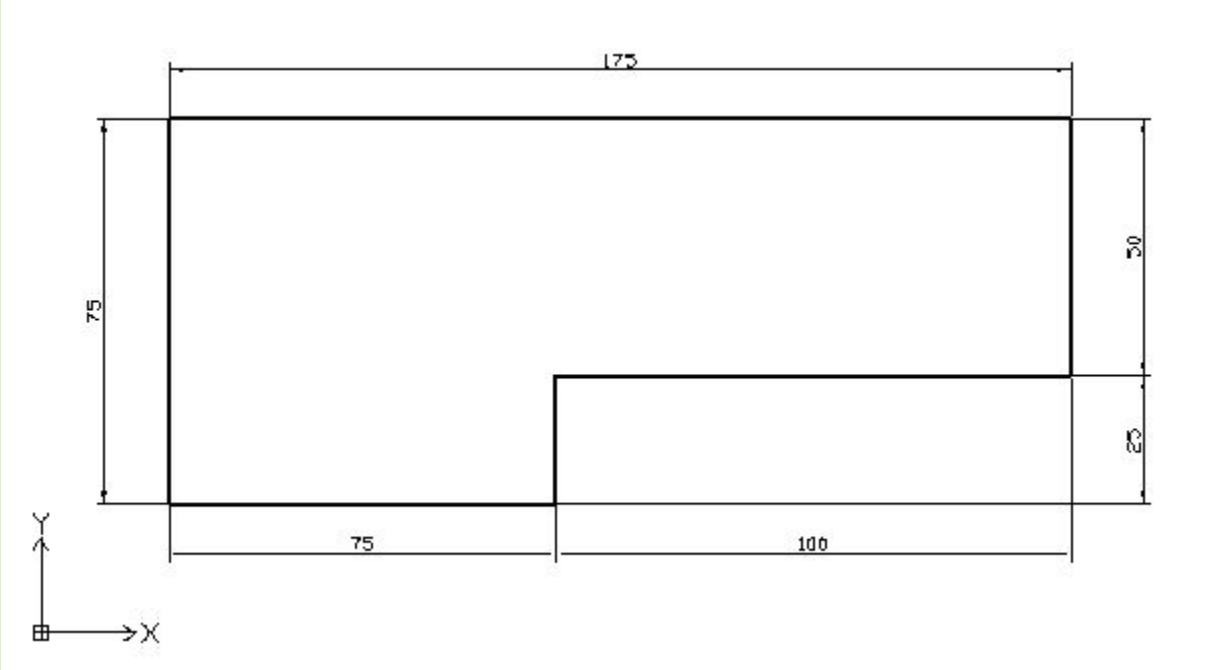

Snap from Entity Snap

Command Access

Toolbar Menu	
Pull-Down Menu	
Command	Shift + Right Mouse Button
Alias	
Dialog Box	

Command Overview

Snap From is an Entity Snap option that should be used in combination with another Entity Snap. The point selected becomes a reference to the next point that is designated by typing a **Relative** or **Polar Coordinate**.

General Procedure

1. When prompted to `Specify point>>`, select **Snap from Entity Snap**. Then select another Entity Snap (i.e., Endpoint or Midpoint).
2. Type a **Relative** or **Polar Coordinate**.

TIP:

- The **Snap From** option will eliminate the need to draw extra construction lines. Using ESnap and ETrack in combination will eliminate the need to use Snap **From**.
- Typically two Entity Snap options in a row will cancel both options (i.e., DraftSight does not understand the Endpoint of a Midpoint). However, this is not the case with Snap **From**.

Drawing Boundary

Command Access

Toolbar Menu	
Pull-Down Menu	Format>Drawing Boundary
Command	DrawingBounds
Alias	BOUNDS
Dialog Box	

Command Overview

The **Drawing Bounds** command establishes the limits of an otherwise limitless workspace. The lower left corner is typically 0,0. The upper right corner of the drawing area should be large enough to contain the entire drawing. After changing the **Drawing Bounds**, use **Zoom Bounds** to see the entire drawing area. The Grid represents the Drawing Boundary. If the Grid spacing is too dense, then the boundary will not be visible.

General Procedure

1. Click **Format**>**Drawing Boundary** from the pull-down menu.
2. For the lower left corner, type `0,0` or press ↵ to accept the default.
3. At the command prompt, for the upper right corner, press ↵ to accept the default, type the **x, y** value or **pick a point** in the drawing to establish the x ,y coordinates of the upper right corner.
4. **Zoom Bounds** to view the entire work area.
5. Right-click on Grid in the Status Bar and select **Settings**. Set the grid spacing according to the drawing area.

TIP:

- The Drawing Boundary may be changed at any time, without affecting the drawing geometry.
- Remember to **Zoom Bounds** after changing the Drawing Boundary to view the entire work area.
- The **On** option will restrict drawing outside the Drawing Boundary. This is typically set to **Off**.
- Commands that are affected by the Drawing Boundary are **Zoom Bounds**, **Grid** and **Print**>**Drawing boundary**.
- If the Grid spacing is set to 0,0, it will be equal to the Snap spacing.
- Use the following chart as a guideline for setting Drawing Boundary for Architectural Drawings.

Drawing Boundary for Architectural Drawings

When printing a drawing in Model Space, it is a good idea to make the Drawing Boundary proportionate to the paper size. Always draw full scale, then plot the drawing to scale or use the Sheet Tabs and zoom the drawing views to scale. Use this chart to determine the Drawing Boundary when using Architectural Units (English System). For instance, a drawing on D size paper or 48 x 36, with a scale of 1/8 inch = 1 foot, has a scale factor of 96. To make the drawing boundary proportionate to the paper size, the lower left corner should be 0,0 and the upper right corner should be 384',288'.

Paper Size	Drawing Scale	Scale Factor	Drawing Boundary
8 ½ x 11 inch	1/16 inch = 1 ft.	192	0,0/136’,176’
	1/8 inch = 1 ft.	96	0,0/68’,88’
	3/16 inch = 1 ft.	64	0,0/45’4,58’8
	¼ inch = 1 ft.	48	0,0/34’4,44’
	3/8 inch = 1 ft.	32	0,0/22’8,29’4
	½ inch = 1 ft.	24	0,0/27’,22’
	¾ inch = 1 ft.	16	0,0/11’4,14’8
	1 inch = 1 ft.	12	0,0/8’6,11’
	1 ½ inch = 1 ft.	8	0,0/5’8,7’4
	1 inch = 20 ft.	240	0,0/170’,220’
	1 inch = 30 ft.	360	0,0/255’,330’
	1 inch = 40 ft.	480	0,0/340’,440’
	1 inch = 50 ft.	600	0,0/425’,550’
	1 inch = 60 ft.	720	0,0/510’,660’
11 x 17 inch	1/16 inch = 1 ft.	192	0,0/ 272’,176’
	1/8 inch = 1 ft.	96	0,0/136’,88’
	3/16 inch = 1 ft.	64	0,0/90’8,58’8
	¼ inch = 1 ft.	48	0,0/68’,44’
	3/8 inch = 1 ft.	32	0,0/45’4,29’4
34 x 22 inch	1/16 inch = 1 ft.	192	0,0/544’,352’

Paper Size	Drawing Scale	Scale Factor	Drawing Boundary
34 x 22 inch	1/8 inch = 1 ft.	96	0,0/272’,176’
	3/16 inch = 1 ft.	64	0,0/181’4,117’4
	¼ inch = 1 ft.	48	0,0/136’,88’
	3/8 inch = 1 ft.	32	0,0/90’8,58’8
	½ inch = 1 ft.	24	0,0/68’,44’
	¾ inch = 1 ft.	16	0,0/45’4,29’4
	1 inch = 1 ft.	12	0,0/34’22’
	1 ½ inch = 1 ft.	8	0,0/22’8,14’8
	1 inch = 20 ft.	240	0,0/680’,440’
	1 inch = 30 ft.	360	0,0/1020’,660’
	1 inch = 40 ft.	480	0,0/1360’,880’
	1 inch = 50 ft.	600	0,0/1700’,1100’
	1 inch = 60 ft.	720	0,0/2040’,1320’
36 x 24 inch	1/16 inch = 1 ft.	192	0,0/576’,384’
	1/8 inch = 1 ft.	96	0,0/288’,192’
	3/16 inch = 1 ft.	64	0,0/192’,128’
	¼ inch = 1 ft.	48	0,0/144’96’
	3/8 inch = 1 ft.	32	0,0/96’,64’
	½ inch = 1 ft.	24	0,0/72’,48’
	¾ inch = 1 ft.	16	0,0/48’,32’
	1 inch = 1 ft.	12	0,0/36’,24’
	1 ½ inch = 1 ft.	8	0,0/24’,16’
	1 inch = 20 ft.	240	0,0/720’,480’
	1 inch = 30 ft.	360	0,0/1080’,720’
	1 inch = 40 ft.	480	0,0/1440’,960’
36 x 24 inch	1 inch = 50 ft.	600	0,0/1800’,1200’

Paper Size	Drawing Scale	Scale Factor	Drawing Boundary
	1 inch = 60 ft.	720	0,0/2160’,1440’
	½ inch = 1 ft.	24	0,0/34’,22’
	¾ inch = 1 ft.	16	0,0/22’8,14’8
	1 inch = 1 ft.	12	0,0/17’,11’
	1 ½ inch = 1 ft.	8	0,0/11’4,7’4
	1 inch = 20 ft.	240	0,0/340’,220’
	1 inch = 30 ft.	360	0,0/510’,330’
	1 inch = 40 ft.	480	0,0/680’,440
	1 inch = 50 ft.	600	0,0/850’,550’
	1 inch = 60 ft.	720	0,0/1020’,660’
42 x 30 inch	1/16 inch = 1 ft.	192	0,0/642’,480’
	1/8 inch = 1 ft.	96	0,0/336’,240’
	3/16 inch = 1 ft.	64	0,0/224’,160’
	¼ inch = 1 ft.	48	0,0/168’,120’
	3/8 inch = 1 ft.	32	0,0/112’,80’
	½ inch = 1 ft.	24	0,0/84’,60’
	¾ inch = 1 ft.	16	0,0/56’,40’
	1 inch = 1 ft.	12	0,0/42’,30’
	1 ½ inch = 1 ft.	8	0,0/28’,20’
	1 inch = 20 ft.	240	0,0/840’,600’
	1 inch = 30 ft.	360	0,0/1260’,900’
	1 inch = 40 ft.	480	0,0/1680’,1200’
	1 inch = 50 ft.	600	0,0/2100’,1500’
	1 inch = 60 ft.	720	0,0/2520’,1800’
48 x 36 inch	1/16 inch = 1 ft.	192	0,0/768’,576’
	1/8 inch = 1 ft.	96	0,0/384’,288’

Paper Size	Drawing Scale	Scale Factor	Drawing Boundary
	3/16 inch = 1 ft.	64	0,0/256’,192’
	¼ inch = 1 ft.	48	0,0/192’,144’
	3/8 inch = 1 ft.	32	0,0/128’,96’
	½ inch = 1 ft.	24	0,0/96’,72’
	¾ inch = 1 ft.	16	0,0/64’,48’
	1 inch = 1 ft.	12	0,0/48’,36’
	1 ½ inch = 1 ft.	8	0,0/32’,24’
	1 inch = 20 ft.	240	0,0/960’,720’
	1 inch = 30 ft.	360	0,0/1440’,1080’
	1 inch = 40 ft.	480	0,0/1920’,1440’
	1 inch = 50 ft.	600	0,0/2400’,1800’
	1 inch = 60 ft.	720	0,0/2880’,2160’

Command Exercise - Drawing Boundary

Estimated time to completion: 5 minutes

Drawing Name: `bounds1.dwg`

Scope:

Zoom Bounds to view the current Drawing Boundary, then change the **Drawing Bounds**. Use `0,0` for the lower left corner and use `22,17` for the upper right corner. **Zoom Bounds** again. Notice the Grid is displayed in a larger area.

Section 3 Exercise - Base Plate

Estimated time to completion: 15 minutes

Drawing Name: `None` (start from scratch)

Scope:

Use the commands you have learned in the past section to create the drawing. Use dimensions as guidelines (you do not have to add them). Use the **Get Distance** command to make sure the drawing is correct. Try creating the outline with coordinate entry.

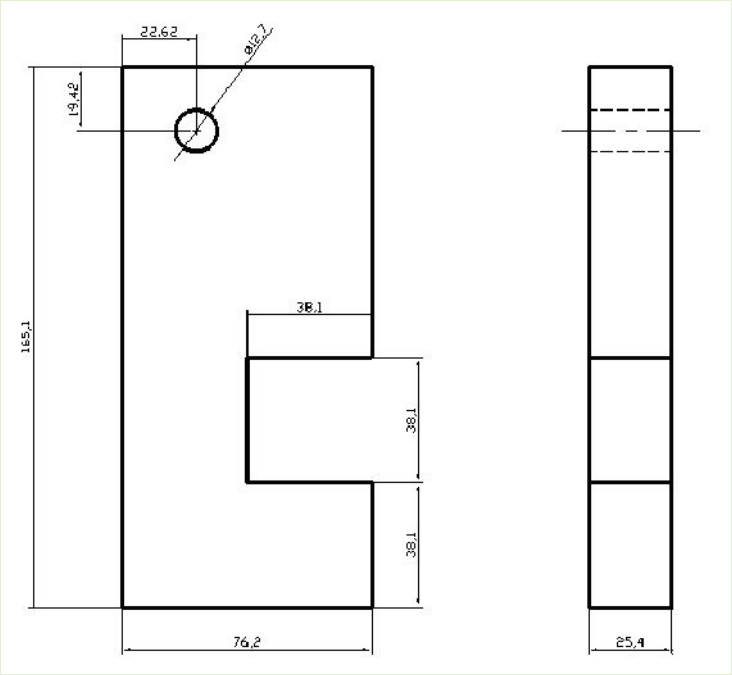

TIP:

- Start by setting the **Snap** and **Grid** to **10**. Set the **Drawing Bounds** to **420,297**.
- Set the **Decimal Units** with **0.00 precision**.
- Use the Tracking or **Snap From** option to locate the circle in the correct area.
- Use temporary lines or Tracking and the **Tangent Entity Snap** to create the hidden lines that represent the circle in the side view.
- The drawing shown is drawn in third-angle projection.

Section 3 Exercise - Architectural Coordinates

Estimated time to completion: 20 minutes

Drawing Name: `None` (start from scratch)

Scope:

Using the figure below as a guideline, draw the layout shown. Set the **Units** to Architectural, **0'-0" Precision**. Do not worry about drawing the dimensions, use only them as a reference.

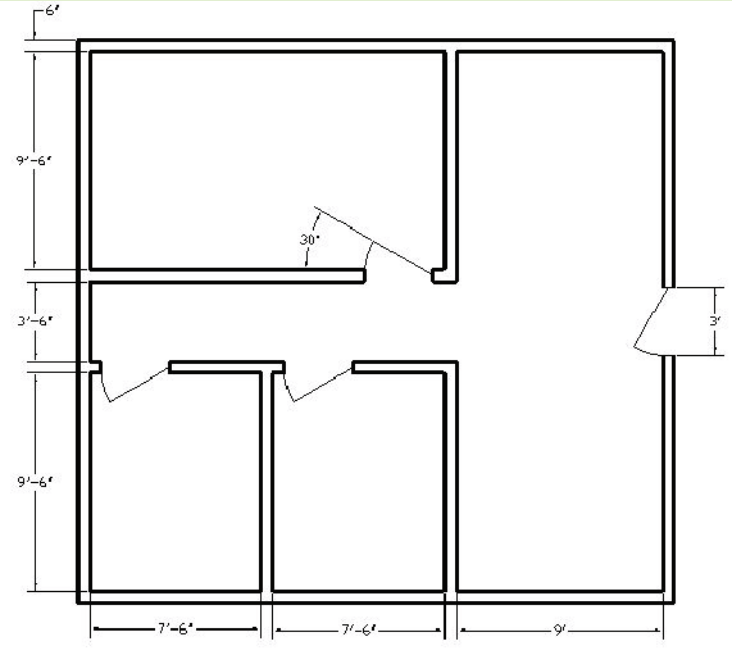

TIP:

- Set the units to Architectural first.
- Draw the walls using different types of coordinate entry.
- Use the **Get Distance** command to check your distances.

Section 3 Review Questions

1 Identify the following icons by writing the command and the toolbars where they can be found.

	Icon	Command	Toolbar
a.			
b.			
c.			
d.			

2 From what pull-down menu can you access the Units dialog box and Drawing Boundary command?

__ Tools

__ View

__ Format

__ Dimension

3 From what pull-down menu can you access the Drawing Setting dialog box?

__ Tools

__ Format

4 If you are drawing a building 100' x 50', what would seem reasonable limits?

Lower Left Corner _____

Upper Right Corner _____

5 What happens to the grid spacing if you set it to 0?

__ The grid is never displayed if you set it to 0

__ Snap setting goes polar

__ Grid defaults to the Snap spacing

__ DraftSight reverts to Grid Off mode

6 Can you draw with Absolute Polar coordinates?

7 How is Snap **On** and **Off** different from Entity Snap?

8 Give an example for the following methods to type coordinates:
Absolute: _____Relative: _____

Polar: _____Direct Distance: _____

9 If drawing in Architectural Units, and you simply type 6, does DraftSight assume this to be six feet, or six inches?

10 Do you need to type leading and trailing zeros?

Section 4
Modify Commands

Estimated Class Time: 2.5 hours

Objectives

This section will cover simple Modify commands and methods for selecting entities to modify. Most of these commands will be located in the Modify toolbar. Begin with a Modify command, and then select the objects to modify. Press <Enter> to continue. Remember to read the command line and follow the DraftSight prompts.

- **Entity Selection Options**
Learn the various methods for selecting entities.
- **Move**
Move selected entities to a new location.
- **Copy**
Copy selected entities to a new location.
- **Mirror**
Mirror selected entities about a mirror line.
- **Rotate**
Rotate selected entities to make a new angle.
- **Scale**
Scale entities to make them larger or smaller.
- **Trim**
Trim entities to a cutting edge.
- **Extend**
Extend entities to a boundary.

Selecting Entities

Command Overview

Knowing how to select objects is an important aspect of all of the Modify commands. Typically one begins with a specific Modify command and then selects the objects to modify. When an object is selected, it will be highlighted. Continue to select (or de-select) entities at the `Specify entities>>` prompt, and press ↵ to continue. Entities can be selected individually, with a selection window or by invoking one of the options at the `Select entities>>` prompt.

Select Entity Option	Key	Overview
Pick (select)		Place the cursor over the object and select it using the left mouse button
Window (left to right)		Making a selection window from left to right will create a window in which only the entities that are completely within the window will be selected. Place the cursor in a blank area of the drawing to the left of the entities to select, and click the left mouse button. Drag the mouse to the right to display the selection window, and click the opposite corner.
Window (right to left)		Making a selection window from right to left will create a crossing window. All of the entities that are crossed by this window will be selected. Place the cursor in a blank area of the drawing to the right of the entities to select, and click the left mouse button. Drag the mouse to the left to display the selection window, and click the opposite corner.
Deselecting entities		To deselect a previously selected entity, press the **Shift** key and select it again using the left mouse button. (It may be necessary to select it twice.)
Last	L	At the Specify entities prompt, type **L** to select the **Last** entity drawn.
All	ALL	At the Specify entities prompt, type **ALL** to select all of the entities in the drawing.
Fence	F	At the Specify entities prompt, type **F** to initiate the **Fence** option. All entities crossed by the fence line will be selected.
Window Polygon	WP	At the select entities prompt, type **WP** to initiate a **Window Polygon**. Create the polygon by picking points around the entities to select. This will be easier if Ortho is **Off**. Only entities completely within the window polygon will be selected.

Select Entity Option	Key	Overview
Crossing Polygon	CP	At the Select entities prompt, type **CP** to initiate a **Crossing Polygon**. Create the polygon by picking points around the entities to select. This will be easier if Ortho is **Off**. All entities crossed by the polygon will be selected
Undo	U	At the Select entities prompt, type **U** to remove the previously selected entities.

General Procedure

1. Click a Modify command.
2. At the `Specify entities>>` prompt, initiate the selection option (remember to press ↵).
3. When all of the desired entities have been selected, press ↵ to continue with the modify command.

TIP:

- After all entities have been selected, press ↵ to continue, even if all entities have been selected.
- If the selection window is accidentally selected, try to utilize the crossing window to select the entity. If there is no way to properly cross the entity with a window to select it (right to left), make a window that selects nothing and try to select the entity again without exiting the Modify command.
- It is very difficult to select entities if the Snap is **On**.
- Entities can also be selected first, and then a Modify command can be selected. When entities are selected first, they will be highlighted and will display EntityGrips.
- At the `Select entities>>` prompt, type **?** to view the list of command line options. Type the letter that is capitalized for the option desired and press ↵. It is not necessary to view this list in order to utilize one of the selection options.

Command Exercise - Selecting Entities

Estimated time to completion: 5 minutes

Drawing Name: `Select 1.dwg`

Scope:

Using the **Delete** command, practice deleting objects using various selection methods.

1. Use the **Window** option (left to right) to select the red entities.
2. Use the **Fence** option to select the green entities.
3. Use the **Window Polygon** (**WP**) option to delete the blue entities.

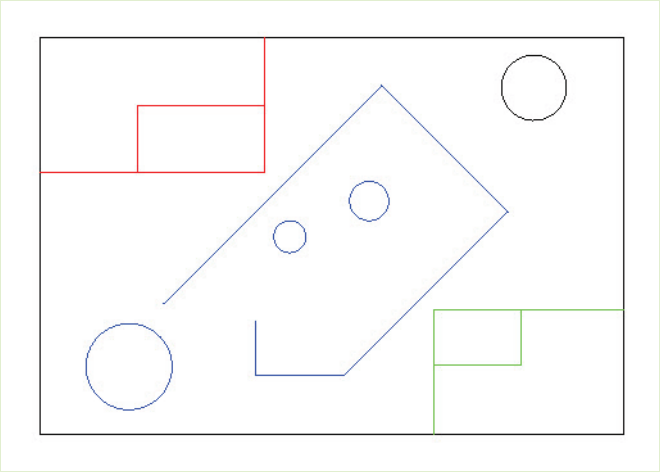

NOTE: Try using the **Undo** command and bring back the entities and try different selection methods.

TIP:

- Dashed lines displayed on the screen when using the selection methods indicates that entities have been selected.

Move Command

Command Access

Toolbar Menu	Modify / Move
Pull-Down Menu	Modify>Move
Command Line	Specify entities
Alias	M
Dialog Box	

Command Overview

To move an entity, pick a base point, drag and pick or use any of the methods previously discussed to input coordinates.

General Procedure

1. Click the **Move** icon from the Modify toolbar.
2. Select the entities to move and press ↵.
3. Pick a point to be used as a base (from) point.
4. Drag the mouse and pick the destination (to) point, or use the **Absolute**, **Relative**, **Polar** coordinates of direct distance method to relocate the entity.

TIP:

- Use Entity Snaps for picking the base point and the point for the new location.
- If using the direct distance method to relocate the entity, be sure that Ortho is **On**.
- Remember to use the pick button (left mouse button) to select the base point and the new location for the entity.
- Be sure Snap is **Off** when selecting entities.

Command Exercise - Move

Estimated time tp completion: 5 minutes

Drawing Name: `move 1.dwg`

Scope:

Make sure Snap is **Off** and **Move** the blue entities into the red rectangle.

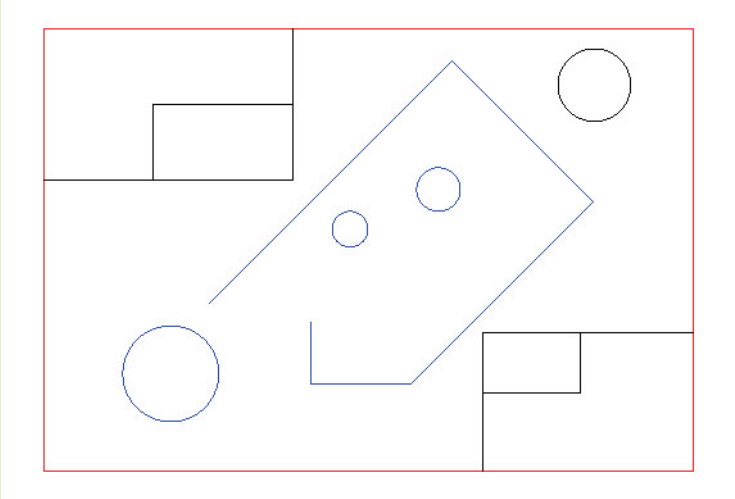

Copy Command

Command Access

Toolbar Menu	Modify / Copy
Pull-Down Menu	Modify>Copy
Command Line	Specify entities
Alias	CO or CP
Dialog Box	

Command Overview

To **Copy** an entity, pick a base point, drag and pick or use any of the methods previously discussed to input coordinates.

General Procedure

To create a single copy:

1. Click the **Copy** icon from the Modify toolbar.
2. Select the entities to **Copy** and press ↵.
3. Pick a point to be used as a base (from) point.
4. Drag the mouse and pick the destination (to) point, or use the **Absolute**, **Relative**, **Polar** coordinates of direct distance method to relocate the entity.
5. Press the ↵ key to exit.

To create multiple copies:

1. Click the **Copy** icon from the Modify Toolbar.
2. Select the entities to **Copy** and press ↵.
3. Pick a point to be used as a base (from) point.
4. Drag the mouse and pick the destination (to) point, or use the **Absolute**, **Relative**, **Polar** coordinates of direct distance method to relocate the entity.
5. Drag the mouse to another new location and click. Continue until all copies have been made.
6. Press the ↵ key to exit.

TIP:

- Use the Entity Snaps for picking the base point and the new location.
- If using direct distance to relocate the entity, be sure Ortho is **On**.
- Remember to use the pick button (left Mouse Button) to pick the base point and the new location of the entity.
- Be sure Snap is **Off** when selecting entities.

Command Exercise - Copy

Estimated time to completion: 5 minutes.

Drawing Name: `copy 1.dwg`

Scope:

Copy the entities in the rectangle on the left into the rectangle on the right.

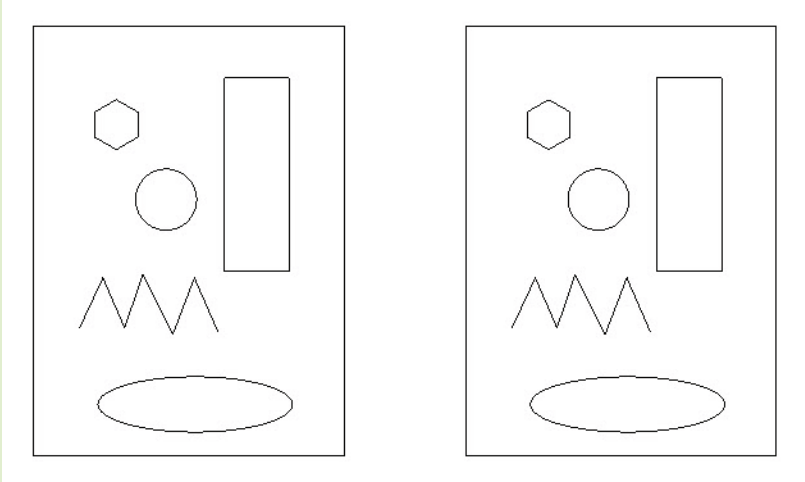

TIP:

- Be sure ESnap is **On** and **Copy** the entities using the bottom left endpoint of the left rectangle to the bottom left endpoint of the right rectangle.

Command Exercise - Copy

Estimated time to completion: 5 minutes

Drawing Name: `copy 2.dwg`

Scope:

Copy the Adjusting Arm in the drawing similar to the graphic shown.

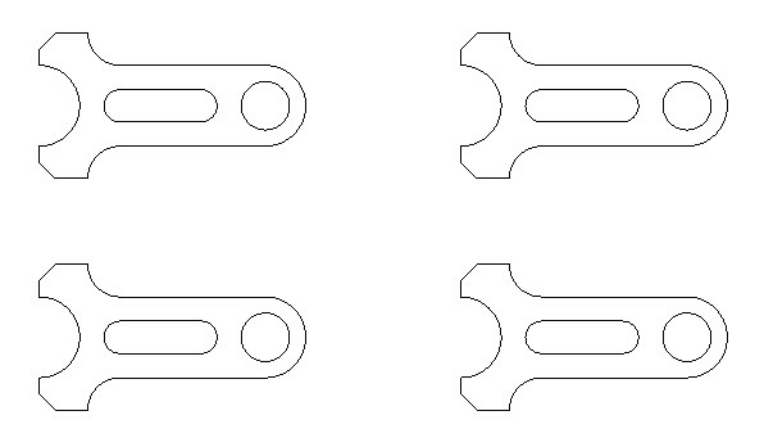

NOTE: What happens when you use the **Undo** command after making multiple copies?

Offset Command

Command Access

Toolbar Menu	Modify / Offset
Pull-Down Menu	Modify>Offset
Command Line	Specify distance
Alias	O
Dialog Box	

Command Overview

To offset a single entity, first set the offset distance by picking two points in the graphics window, or by typing the offset distance. Select the entities to offset and pick the side to offset.

General Procedure

1 Click the **Offset** icon on the Modify toolbar.
2 Set the offset distance (pick or keyboard input).
3 Select the entity to offset and press ↵.
4 Click the side of the entity where you want your new copy.

TIP:

- You can offset lines, circles, arcs and PolyLines.

Command Exercise - Offset

Estimated time to completion: 5 minutes

Drawing Name: `offset 1.dwg`

Scope:

Offset the entities in this file with a distance of 10 mm.

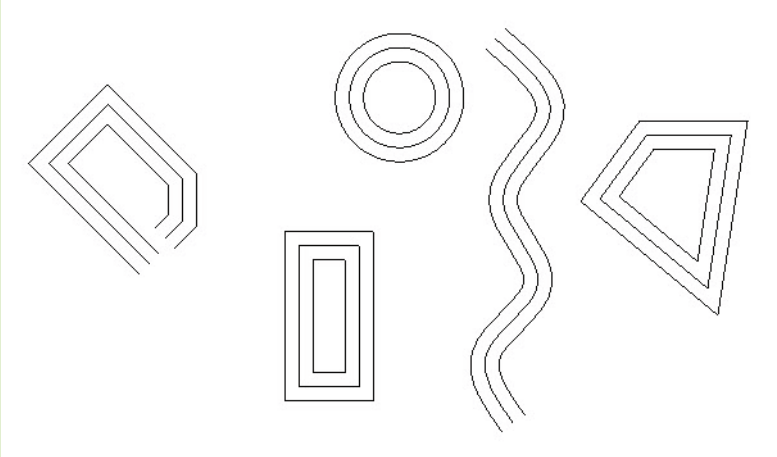

Mirror Command

Command Access

Toolbar Menu	Modify / Mirror
Pull-Down Menu	Modify>Mirror
Command Line	Specify entities
Alias	MI
Dialog Box	

Command Overview

Mirror selected entities around a mirror line with Ortho **On** or **Off**.

General Procedure

1. Click the **Mirror** icon on the Modify toolbar.
2. Select the entities to mirror and press ↵.
3. Pick the first point of the mirror line.
4. Drag the mouse and pick the second point of the mirror line.
5. At the command prompt `Delete source entities?,` press ↵ to accept the default of **No**, type **Y** to delete the source entities.

TIP:

- Turn Ortho **On** to mirror across a horizontal or vertical line.
- The mirror line goes indefinitely through two points selected.

Command Exercise - Mirror

Estimated time to completion: 5 minutes

Drawing Name: `mirror 1.dwg`

Scope:

Mirror the entities in this file using the endpoints of the upper and lower endpoints for the mirror line.

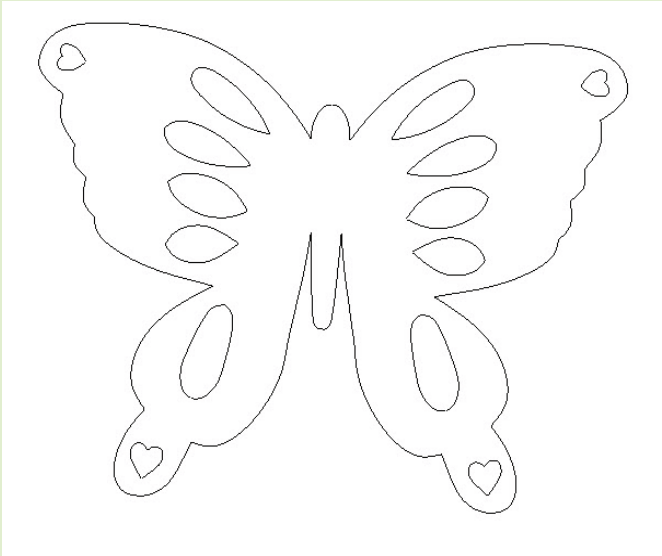

Rotate Command

Command Access

Toolbar Menu	Modify / Rotate
Pull-Down Menu	Modify>Rotate
Command Line	Specify entities
Alias	RO
Dialog Box	

Command Overview

Rotate selected entities in a counterclockwise direction with a positive rotation angle. Rotate in a clockwise direction with a negative angle. The reference option permits the user to reference the angle of an existing line in the drawing and type a new angle.

General Procedure

To use the rotate command:

1 Click the **Rotate** icon on the Modify toolbar.
2 Select the entities to rotate and press ↵.
3 Pick a pivot point for the rotation.
4 Type in the rotation angle, or drag the mouse and pick a rotation angle.

To use the rotate command with reference option:

1 Click the **Rotate** icon on the Modify toolbar.
2 Select the entities to rotate and press ↵.
3 Pick a pivot point for the rotation.
4 Type **R** for **Reference** or select the **right mouse button** and select the **Reference** option from the Shortcut menu.
5 Using EntitySnaps, select the endpoints of the line to reference. This will determine the precise reference angle.
6 Type the new angle.

TIP:

- Turn Ortho **On** to rotate in 90 degree increments, relative to the current rotation angle.
- When rotating the entity with Ortho **On**, keep the cursor close to the base point to make it easier to rotate.
- When using the **Reference** option to straighten entities, it is more accurate to reference the angle of a line in the drawing using the EntitySnap, than to try and find the angle of the line and rotate it in the negative direction.
- Entities will be rotated around the rotation pivot point.

Command Exercise - Rotate

Estimated time to completion: 5 minutes

Drawing Name: `rotate 1.dwg`

Scope:

Rotate the entities (text included) as listed in the drawing.

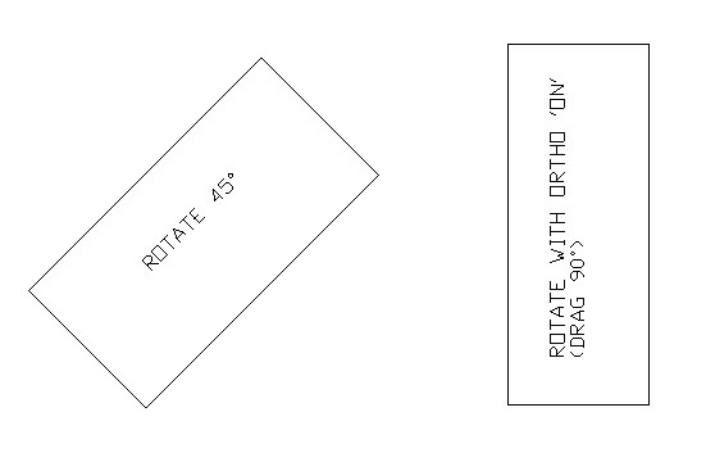

Command Exercise - Rotate

Estimated time to completion: 5 minutes

Drawing Name: `rotate 2.dwg`

Scope:

Straighten the object using the **Reference** option with rotate. Use "A" as the pivot point.

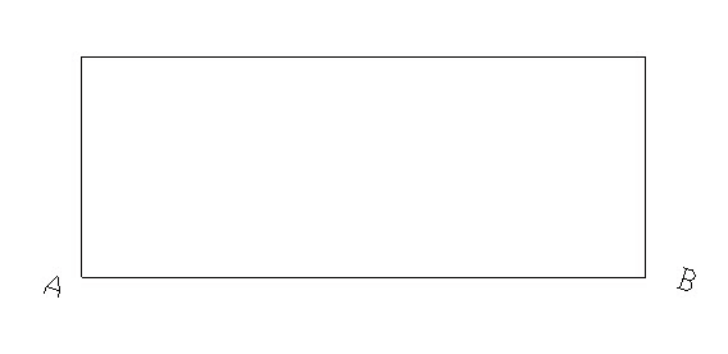

Scale Command

Command Access

Toolbar Menu	Modify / Scale
Pull-Down Menu	Modify>Scale
Command Line	Specify entities
Alias	SC
Dialog Box	

Command Overview

Scale entities up or down from a selected base point. Use the reference point option to reference a known length, then type the new length to scale the object proportionately.

General Procedure

To use the **Scale** command:

1. Click the **Scale** icon on the Modify toolbar.
2. Select the entities to scale and press ↵.
3. Pick a base point on or near the entity.
4. Type in the scale factor and press ↵.

To use the **Scale** command with the reference option:

1. Click the **Scale** icon on the Modify toolbar.
2. Select the entities to scale and press ↵.
3. Pick a base point on or near the entity.
4. Type **R** for **Reference** (and press ↵), or press the **Right Mouse Button** and select **Reference** from the Shortcut menu.
5. Use EntitySnaps to specify the reference length, or type the reference length, if known.
6. Type the new length.

TIP:

- Entities will be scaled up or down proportionately.
- When using **Scale** with the **Reference** option, it is more precise to use the EntitySnap to specify a reference length.

Command Exercise - Scale

Estimated time to completion: 5 minutes

Drawing Name: `scale 1.dwg`

Scope:

Scale the images as indicated in the drawing.

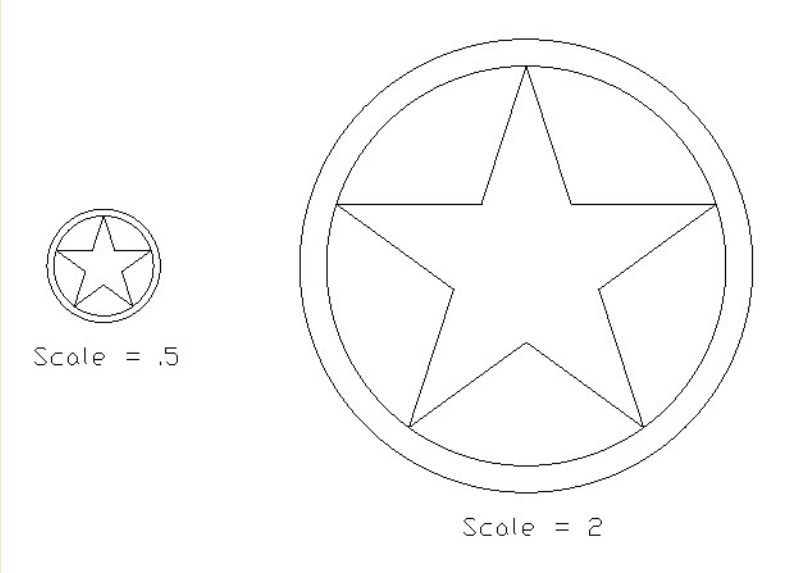

TIP:

- Remember that the base point represents the point about which objects are scaled. If you select a base point that is away from the part, the object may move off the screen when scaled. Use the **Zoom Extents** command to regain your view.

Command Exercise - Scale

Estimated time to completion: 5 minutes

Drawing Name: `scale 2.dwg`

Scope:

Scale the image so that the outside diameter is 50.

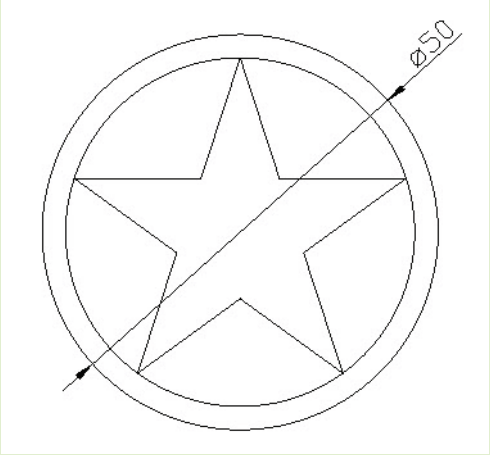

TIP:

- For the reference point, use the **Quadrant** snap point and choose the diameter of the circle.

Trim Command

Command Access

Toolbar Menu	Modify / Trim
Pull-Down Menu	Modify>Trim
Command Line	Specify entities
Alias	TR
Dialog Box	

Command Overview

Trim entities to a cutting edge. The cutting edge may or may not cross the entity to trim. If the entities do not cross or intersect, hold the **Shift** key when selecting the trim entity to extend the entity. Undo is an option that can be used within the **Trim** command, without completely exiting the command.

General Procedure

Regular Trim (no extend):

1. Click the **Trim** icon on the Modify toolbar.
2. `Specify cutting edges>>` and press ↵.
3. `Specify segments to remove>>`.
4. Press ↵ to exit.

Trim Using the Extend Option:

1. Click the **Trim** icon on the Modify toolbar.
2. `Specify cutting edges>>` and press ↵.
3. Hold the **Shift** key and `Specify segments to remove>>` (extend).
4. Press ↵ to exit.

TIP:

- Selecting multiple entities to trim is acceptable.
- An entity must be crossed by the cutting edge to be trimmed (unless the **Extend** option is selected and the entity would cross the cutting edge if extended.)
- The cutting edge must cross a circle in two places in order for the circle to be trimmed.

Command Exercise - Trim

Estimated time to completion: 5 minutes

Drawing Name: `trim 1.dwg`

Scope:

Trim the lines outside the box. Select the lines individually. Use the **Undo** command to repeat the exercise using a selection window (right to left selection).

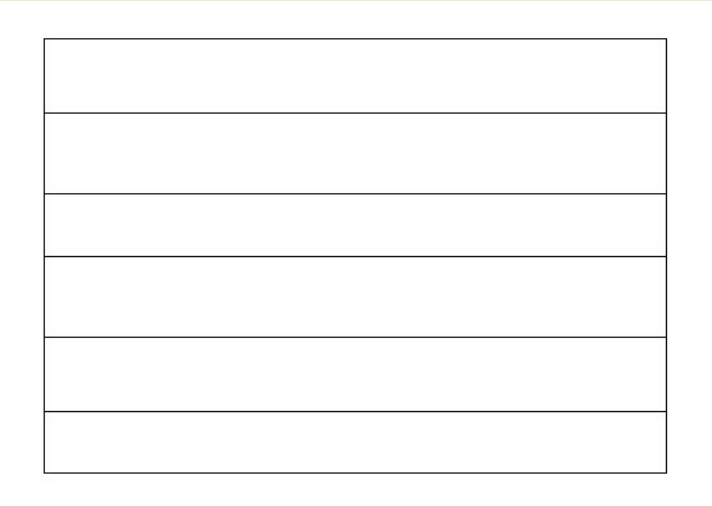

Command Exercise - Trim

Estimated time to completion: 5 minutes

Drawing Name: `trim 2.dwg`

Scope:

Trim the lines inside the box. Select the lines individually. Use the **Undo** command to repeat the exercise using a selection window (right to left selection).

Extend Command

Command Access

Toolbar Menu	Modify / Extend
Pull-Down Menu	Modify>Extend
Command Line	Specify entities
Alias	EX
Dialog Box	

Command Overview

Extend entities to a boundary, by selecting the entities towards the end to be extended. The boundary may or may not reach the entity being extended.

General Procedure

1. Select the **Extend** icon on the Modify toolbar.
2. `Specify boundary edges>>` and press ↵.
3. `Specify segments to extend>>`.
4. Press ↵ to exit.

TIP:

- The **Undo** option will undo one step at a time, without exiting the **Extend** command.
- An entity must be able to meet the boundary edge to be extended.
- Select the entity to extend anywhere on the half that is closest to the boundary.
- If an entity crosses the boundary line, hold the **Shift** key and select it to **Trim** it

Command Exercise - Extend

Estimated time to completion: 5 minutes

Drawing Name: `extend 1.dwg`

Scope:

Extend the horizontal lines to the side of the rectangle. Select the lines individually. Use the **Undo** command to repeat the exercise using a selection window (right to left selection).

Section 4 Exercise - Subassembly

Estimated time to completion: 15 minutes

Drawing Name: `section 4 mcad.dwg`

Scope:

Use the commands you have learned in this past section to assemble the components so the drawing looks like the figure on the right. Clean the corners of the base plate with the **Trim** and **Extend** commands.

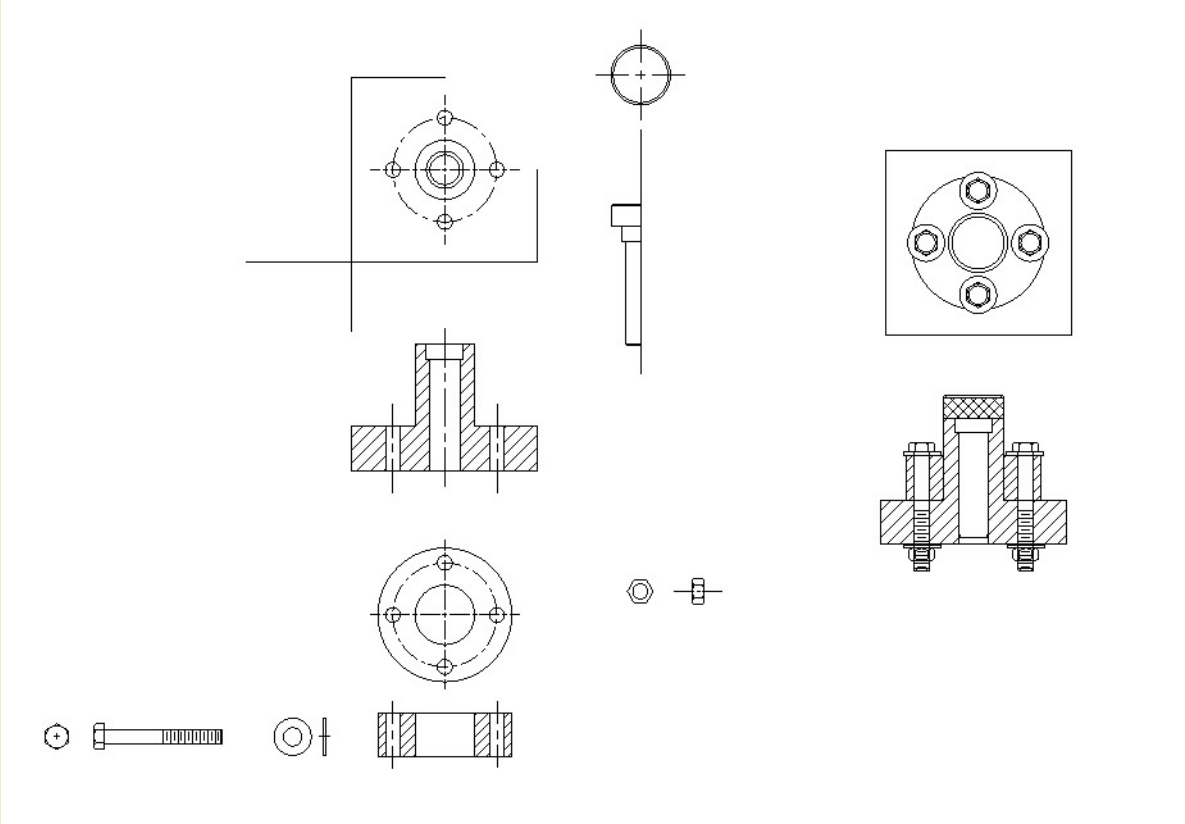

Section 4 Exercise - Modify Commands

Estimated time to completion: 15 minutes

Drawing Name: `section 4 aec.dwg`

Scope:

Using the Modify commands, furnish the patient wards as shown.

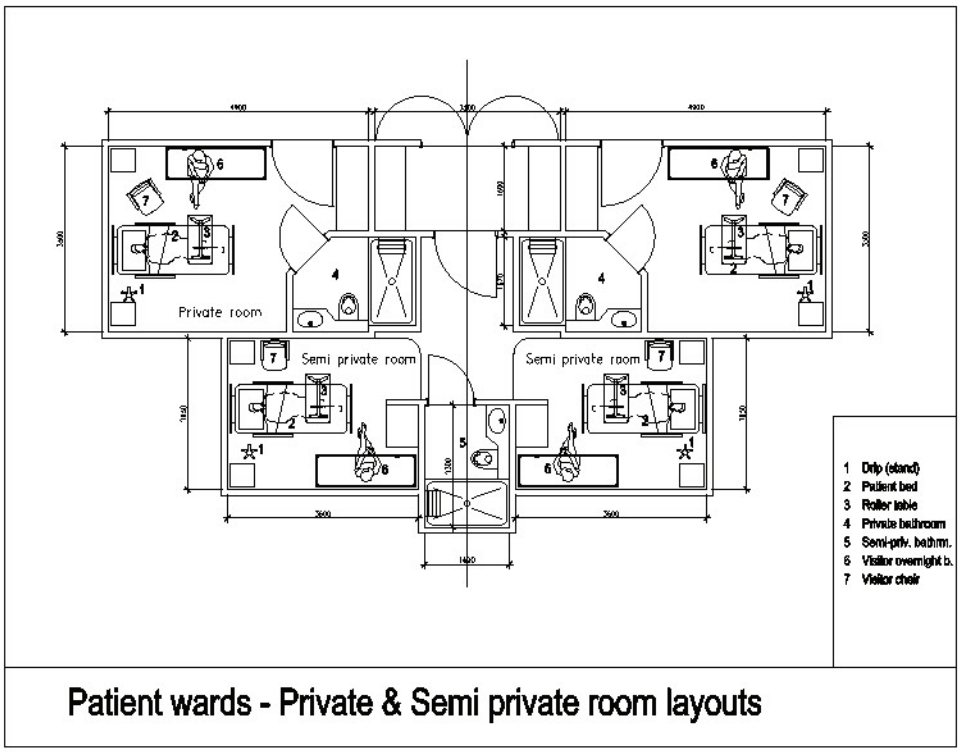

Section 4 Review Questions

1 At the Select entities prompt, what letter must you type to use the Fence option?

___FE

___FO

___F

___O

2 Write down the letter to type for each of the following Entity Selection options:

Last - _____

Fence - _____

All - _____

Crossing Polygon - _____

Window Polygon - _____

3 Identify the following icons that can be found on the Modify toolbar:

	Icon	Command
a.		
b.		
c.		
d.		
e.		
f.		
g.		
h		

4 Typing **RO** at the command line invokes which command?

___Scale

___Rotate

___Recover

___Redraw

5 What does the **U** option stand for in the **Trim** and **Extend** commands?

6 Can you trim a circle? Try it. If you are able to trim a circle, what type of entity does it become?

7 Explain the similarities between the **Copy** and **Move** commands.

8 Can you trim a line that is acting as a cutting edge? Try it.

Section 5
Properties and Layers Toolbars

Estimated Class Time: 3 hours

Objectives

This section will focus on the Properties and Layers toolbars. Properties include Color, LineStyle and LineWeight and Layers. Layers will keep the drawing information organized. Use the drop-down layer control list to make a layer current or change a layer's state. Use the Layers manager dialog box to create new layers. These settings can be saved to a drawing that can be use for a prototype or template for other drawings.

- **Layer Control**

Control the layer's state from this drop-down list.

- **Make an Entities Layer Current**

Select an entity in the drawing and make its layer be the current layer.

- **Color Control**

Control the color of the objects being drawn.

- **LineWeight Control**

Control the LineWeight of the entities being drawn.

- **Layers Manager**

Use the Layers Manager dialog box to create a system of layers for the current drawing.

TIP:

- A layer that is current cannot be frozen, and vice versa.
- Use the **Freeze** option instead of **Off**. A frozen layer is completely ignored in a drawing regeneration and will therefore make a faster regeneration.

Layer Control

Command Access

Toolbar Menu	Layers
Pull-Down Menu	Format>Layers
Command	Layers
Alias	LA
Dialog Box	Layers Manager

Command Overview

Layers may be conveniently selected from the Layer Control drop-down list. Layers may be made current, or the layer's state may be changed. The options include **On** or **Off**, **Freeze** or **Thaw**, **Lock** or **Unlock** and making a layer printable or not. A layer may be made current by selecting it from the list. When the command line is blank, the properties of a selected entity will be identified in the Properties Pallet, and can be placed on a different layer by selecting a different layer from the drop-down list. This feature applies to Color, LineType and LineWeight.

Layer State	Overview
Make Layer Current	Select the name of the layer in the drop-down list to make it current. Objects drawn on the current layer will have the properties that are assigned to that layer.
Turn a Layer On or Off	Select the colored orb to turn that layer on (green). Select it again to turn it off (grey). A layer is not visible when it is turned off, however, it may still be the current layer. A layer that is turned **Off** and current at the same time would be odd, because the new entities drawn would be invisible until the layer is turned on again.
Freeze or Thaw in all Viewports	Select the blue pond symbol to freeze that layer (icicles). Select the icicles to thaw the layer. A layer is not visible when it is frozen. It is also completely ignored in a regeneration, which will make regeneration time faster. A layer that is made current cannot be frozen.
Lock or Unlock a layer	Entities on a locked layer cannot be changed. When a layer is locked current, entities may be drawn on that layer, but cannot be changed.
Make a Layer printable	This feature controls whether a layer is printed or not. This way a layer can be visible, but will not print.

General Procedure

To make a layer current:

1 Click the down arrow 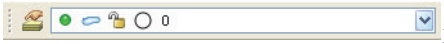 in the layers list from the Layers toolbar.
2 Click the Layer (name) to make it current.

To change a layer's state:

1 Click the down arrow 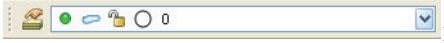 in the layers list from the Layers toolbar.
2 Select the desired option: **On/Off**, **Freeze**, **Thaw**, **Lock/Unlock** or **Print**/No **Print**.

To move entities from one layer to another:

1 With the command line blank, select the entities to change.
2 Click the down arrow 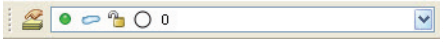 in the layers list and select the desired layer.
3 Press **ESC** two times to deselect the entity and cancel the EntityGrip.

Command Exercise - Layers

Estimated time for completion: 10 minutes.

Drawing Name: `Layer 1.dwg`

Scope:

Using the Layer Control drop-down list, draw the entities on the appropriate layers. Make the layer current before you draw the entities. Practice freeze and thaw options.

1 With the Line Layer current, draw a series of lines.

Notice the lines are cyan in color.

2 With the Circle Layer current, draw a series of circles.

Notice the circles are magenta in color.

3 With the Rectangle Layer current, draw a series of rectangles.

Notice the rectangles are red in color.

4 Lock the Lines layer.

5 Attempt to Delete a line.

Notice the lock icon appears when you select a line.

6 Turn the Circle layer off.

Notice that the circles disappear.

7 Freeze the Rectangle layer.

Notice that you cannot freeze the current layer.

8 Freeze the Lines layer.

Notice that the layer is invisible.

TIP:

- You can draw on a layer that is turned **Off**, but you can't draw on a layer that is frozen. DraftSight will not regenerate objects on a frozen layer. Locking a layer is a good way to use a window to select entities but not those on the locked layer.

Activate Layer Command

Command Access

Toolbar Menu	Layer Tools> / Activate Layer
Pull-Down Menu	Format>Layer Tools>Activate Layer
Command	ActivateLayer
Alias	ACTLAY
Dialog Box	

Command Overview

Make a layer current by selecting an entity in the drawing on that layer.

General Procedure

1 Click **Format**>**Layer Tools**>**Activate Layer** from the pull-down menu.
2 Select the desired entity.

TIP:

- An entities layer can be identified first by selecting it with the command line blank.

Color Control Command

Command Access

Toolbar Menu	Properties / Color
Pull-Down Menu	Format>LineColor
Command	LineColor
Alias	LC
Dialog Box	Line Color

Command Overview

This option controls the color of the entities currently being drawn. Typically, the colors of objects in the drawing should be determined by the ByLayer, and it is not advisable to mix colors in the same layer. This is because the user will usually want to know at a glance that all entities of a certain color are on a particular layer. Be sure that **ByLayer** appears in the color control box. When an entity is selected with the command line blank, selecting a color from the drop-down list will automatically apply the color selected to that entity.

General Procedure

1 Click the down arrow in the color control list.
2 Select **ByLayer.**

TIP:

- When drawing, make sure that the word **ByLayer** appears in the color control window. This is a suggestion, but not a rule.
- The color control list will appear grey when in the middle of a command. Press **ESC** to cancel the command and the color control list will be accessible.
- Selecting **Specify color** from the color control-drop down list will display the Line Color dialog box and a full color spectrum.

LineStyle Control Command

Command Access

Toolbar Menu	Properties / Line Style
Pull-Down Menu	Format>LineStyle
Command	LineStyle
Alias	LSTYLE
Dialog Box	Line Style

Command Overview

This option controls the LineStyle of the entities currently being drawn. It is typical that a variety of LineStyles may be present on the same layer, such as continuous, Centerline and hidden. However, it is best to leave the LineStyle control setting to ByLayer. Selecting **Other** from the drop-down list will display the LineStyle manager dialog box. The user can load additional LineStyles into the drawing using either this dialog box or the Layer manager dialog box.

General Procedure

1. Click the down arrow in the **LineStyle** 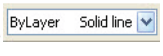

control list.
2. Click **Other**.
3. From the LineStyle manager dialog box, click **Load**..., then scroll through the list to find and click the LineStyles to load into the drawing. Hold down the **CTRL** key to select additional LineStyles. Hold the **Shift** key to select a range of LineStyles. Click **OK** (two times) to exit.

TIP:

- Be sure the word **ByLayer** appears in the LineStyle control window. If making another LinseStyle current for a specific reason, remember to change it back to **ByLayer**.
- LineStyles can be assigned to a layer.
- The system variable **LineScale** will globally control the scale of the LineStyle in the drawing.

LineWeight Control Command

Command Access

Toolbar Menu	Properties / Line Weight
Pull-Down Menu	Format>Line Weight
Command	LineWeight
Alias	LW
Dialog Box	Options>Drafting Styles>Line Font>Line Weight

Command Overview

LineWeight of an entity can be controlled individually or by the layer when set to ByLayer. This section will determine LineStyles by the layer in the section that covers the Layers manager dialog box.

General Procedure

To make the LineWeight the current setting:

1 Click the down arrow in the **LineWeight** 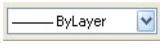

control list.
2 Click the desired **LineWeight.**

To change the LineWeight of an existing entity:

1 With the command line blank, select the entity in the drawing to change.
2 Click the down arrow in the **LineWeight** 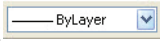

control list.
3 Select the desired **LineWeight**. Once the LineWeights of the entities have changed, press **ESC** twice to cancel the selection.

TIP:

- Be sure that the word **ByLayer** appears in the LineWeight Control window. If selecting another LineWeight current for a specific reason, remember to change it back to **ByLayer**.
- LineWeights can be assigned to a layer.
- LineWeights are not visible unless **Display weight in graphics area** is selected in the LineWeight dialog box.

Layers Manager Command

Command Access

Toolbar Menu	Layer Tools
Pull-Down Menu	Format>Layer Tools
Command Line	
Alias	
Dialog Box	

Command Overview

Use the Layers Manager dialog box to create drawing layers with specific **Names**, **Colors**, **LineStyles**, **LineWeights** and **PrintStyles** (colors) and Print variables (print or no print). The layers list may be sorted in ascending or descending order. By clicking on the heading, such as Name. Layer 0 is a default layer and cannot be renamed or deleted. This makes it a good *working* layer. Other layers may only be deleted if there is no geometry on them and they are not the **Current** layer. Layers may be made **Current**, **Frozen**, **Thawed**, **Locked**, **Unlocked**, turned **On** or **Off** from this dialog box. Once objects are created, they may be moved to other layers using the **change entity layer** command, or by selecting the entity with the command line blank and selecting the layer to move it to from the drop-down list. Create a system of layers to save as a prototype or template drawing.

Feature	Overview
New	Select this button to create a new layer. The default name will be Layer1, Layer2, Layer3, etc. Type in a different layer name, or double-click on the Layer name to change it.
Delete	This option allows the selected layers to be deleted, only if the layer contains no geometry or is not current.
Activate	Select this option to make a highlighted layer active. A layer that is active cannot be frozen.
Status	This gives you a visible notification on which layer is the active one. The active layer has the arrow in the box next to the name.
Name	Lists the layer name. Double-click to rename a layer. Spaces and certain characters are not allowed. To select a layer in the dialog box, pick it with the Left Mouse button. To deselect it, pick it again, select another layer or click in the blank area of the dialog box. To select all layers, right-click in the blank area and choose Specify All.
Show / Hide	Turns the selected layers **On** or **Off**. A layer that is turned off may still be active, but will not be visible. This is an odd state, because objects drawn on that layer will not be seen until the layer is turned back on.

Feature	Overview
Frozen / Thaw	Freezes or thaws selected layers in all viewports. A frozen layer is not visible and cannot be made current.
Lock / Unlock	Locks or unlocks selected layers. It is possible to lock an active layer and draw on the locked layer, but not modify the entities on that layer until it is unlocked.
LineColor	Pick the color for the corresponding layer(s) to access the Color Dialog box. Pick a color from the standard colors or the full color pallet to apply to a selected layer.
LineStyle	Pick the LineStyle for the corresponding layer(s) to access the LineStyle dialog box. Pick a linestyle from the **load linestyles** list to apply to a selected layer. Select the load button to access and select from the **available linestyles** list.
LineWeight	Pick the LineWeight for the corresponding layer(s) to access the LineWeight dialog box. Pick a line weight from the list to apply to a selected layer.
PrintStyle	Displays the **pen color** for the selected layer.
Print	Makes the selected layer printable or not.
Filter	This section controls which layer names are visible. For all practical purposes, the word **All** should be visible in the text window.

General Procedure

1 Click the **Layers Manager** icon on the Layers toolbar.

2 In the **Layers Manager** dialog box, click the **New** icon New and name the New Layer.
3 Select the corresponding Color. To access the Select Color dialog box, click in the color box, and select the down arrow. Choose the appropriate color.
4 Select the corresponding linestyle. To access the LineStyle dialog box, pick the box and select the down arrow. Choose a liestyle from the list or click L**oad**... and pick a linestyle from the list. Click OK or **Cancel** to exit the LineStyle dialog box.
5 Select **OK** from the Layers Manager dialog box.

TIP:

- Use the **Freeze** option instead of **Off**. Layers that are frozen are completely ignored in a regeneration, and hence will speed up regeneration time.
- Deleting a selected layer or linestyle is similar to the **Clean** command.
- A layer can be renamed at any time. This will help to organize the information in the drawing.
- The **Color**, **LineStyle**, and **LineWeight** control options in the Properties toolbar should be set to ByLayer. In this way these options will be determined by the layer.
- The system variable LineScale controls the global scale of the linestyles in the drawing. The effects of LineScale apply to linestyles that contain spaces and dashes (i.e., the hidden or center lines.)

Command Exercise - Layers

Estimated time to completion: 10 minutes

Drawing Name: `None` (start from scratch)

Scope:

Using the **Layers Manager**, create the designated layers and draw the object using the appropriate layers.

1. Create a layer named `Box`, use Continuous LineStyle and Blue color.
2. Create a layer called `Hidden`, load LineStyle `Hidden`, and Red color.
3. Create a layer called `Support`, load LineStyle `Phantom`, and Green color.

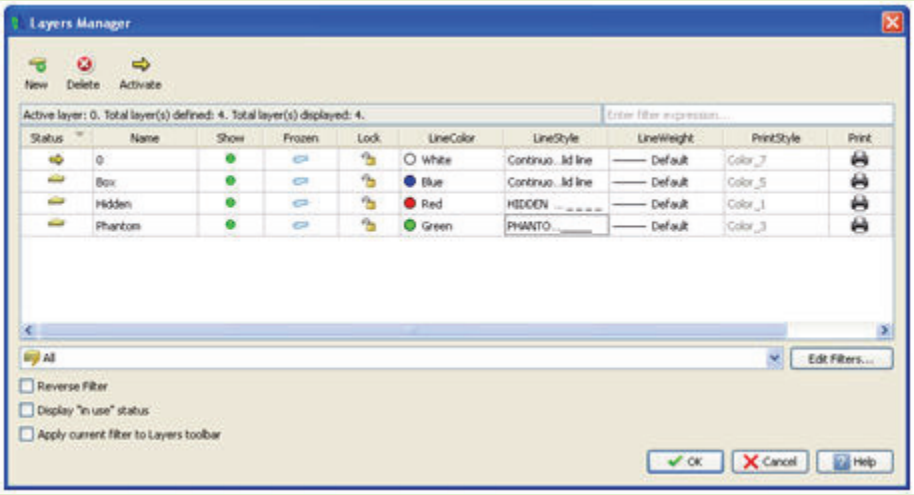

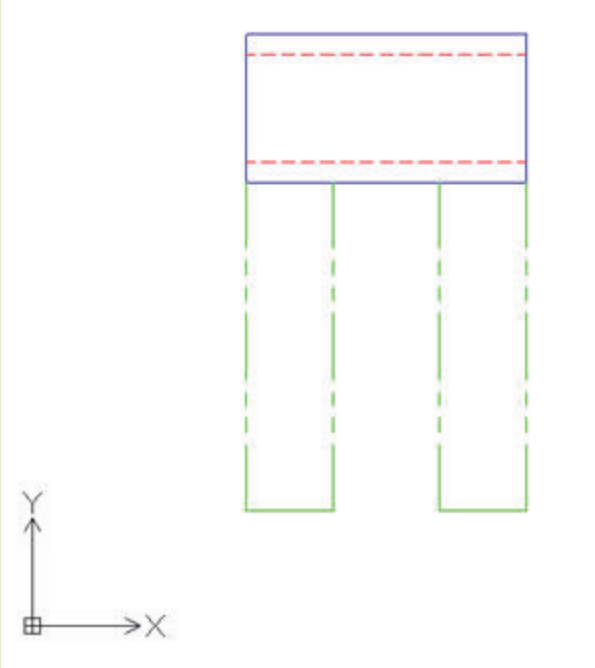

Command Exercise - Layers

Estimated time to completion: 5 minutes

Drawing Name: `layer2.dwg`

Scope:

In the **Layers Manager** dialog box, rename `Layer 1` to `Window`. Make the `House` layer current. Select all and freeze all.

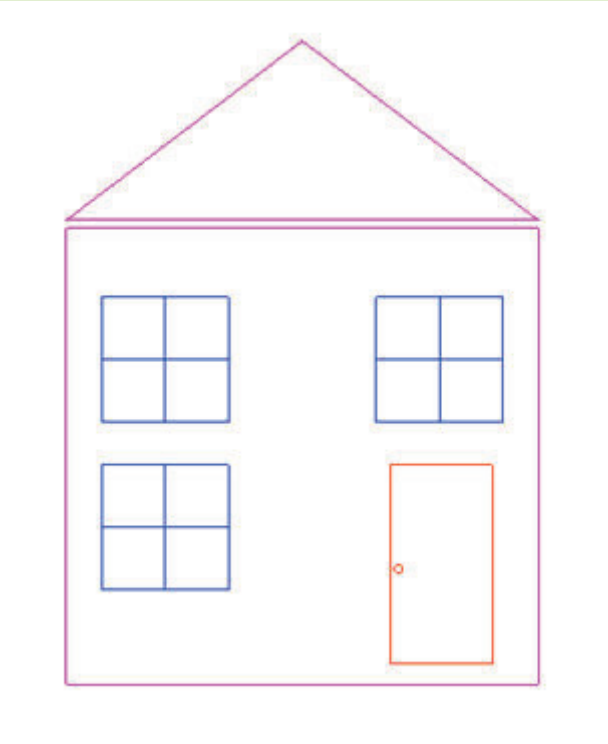

Property Painter

Command Access

Toolbar Menu	
Pull-Down Menu	Modify>Property Painter
Command Line	PropertyPainter
Alias	PAINT
Dialog Box	Property Painter

Command Overview

Object properties of a selected entity can be matched to other entities in the drawing. Select the source entity first, and then select the destination entity(s). The **Match Properties** command will apply the Color, Layer, LineStyle, LineScale, LineWeight, and Dimension, Text and Hatch styles. Once you have selected the source entity, type **S** to invoke the Property Painter dialog box. Remove the checkmark from any items not to match.

General Procedure

1. Invoke the **Property Painter** command by clicking **Modify**>**Property Painter** from the pull-down menu.
2. Click the source entity.
3. Click the destination entity(s).
4. Press ↵ to exit the command.

TIP:

- This option is similar to the Microsoft Word Property Painter.

Command Exercise - Property Painter

Estimated time to completion: 5 minutes

Drawing Name: `painter1.dwg`

Scope:

Using the **Property Painter** command, match the properties of the red object lines in the right side view to the object lines in the front view, so that all of the object entities are black.

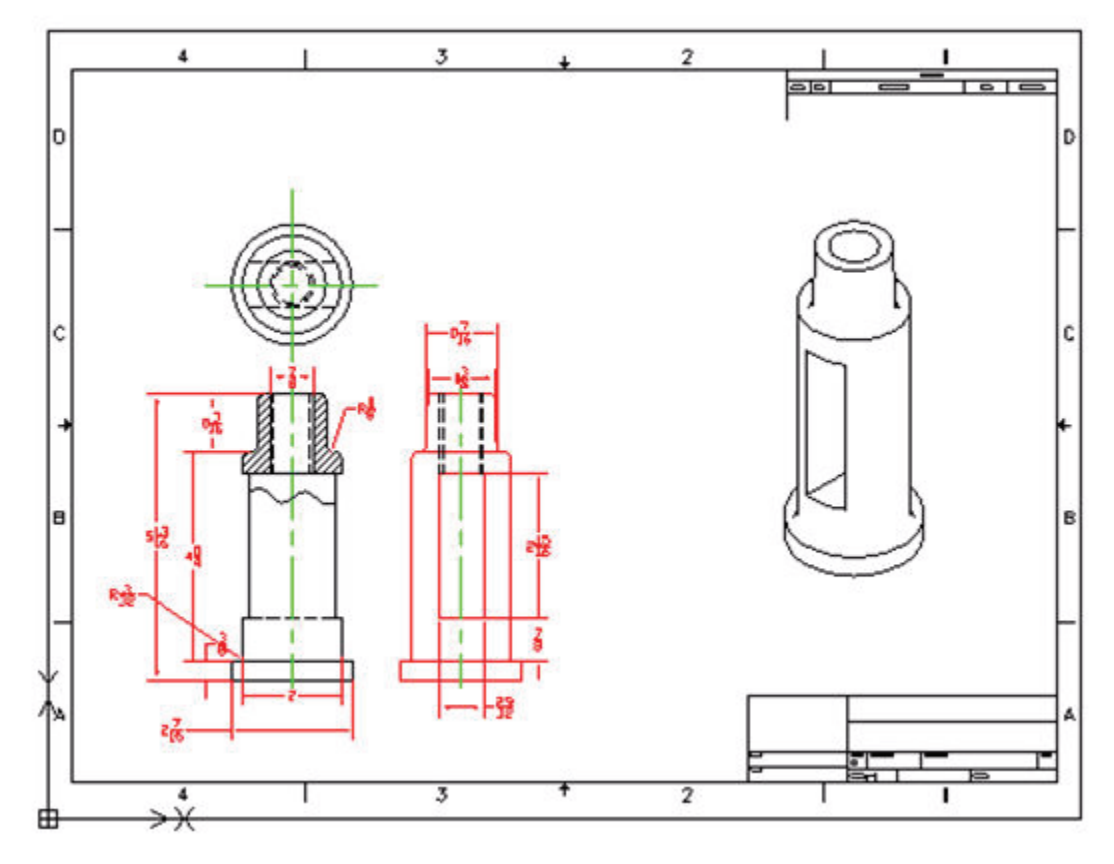

Properties Command

Command Access

Toolbar Menu	Standard
Pull-Down Menu	Modify>Properties
Command Line	Properties
Alias	PR
Dialog Box	Properties (Palette)

Command Overview

Properties of selected entities can be changed using the **Properties** command. The list in the Properties Palette will correspond to the entities selected. Entities may be selected before or after the **Properties** command is invoked. The most common features to change are Layers and LineStyles. When one item is selected, the Properties palette will display options relevant to the features of that entity, such as the radius of a circle, or the contents of selected text. Press **Esc** to deselect entities, and pick new entities to modify.

General Procedure

1. To invoke the **Properties** command, with the command line blank, select the entities to change.
2. Select the options to change from the Properties Manager list, and select or type a new option.
3. Press **Esc** to deselect the entities or exit.

TIP:

- The beginners rule is that colors of entities should be set to ByLayer.
- Only layers that are already created will be available in the Layers list.
- Only line styles that have already been loaded will be available in the LineStyle list.

Command Exercise - Properties

Estimated time to completion: 10 minutes

Drawing Name: `change1.dwg`

Scope:

Using the **Properties** command, move the objects to the `Object` layer, the balloons to the `Balloons` layer, the bill of materials to the `Bill of Material` layer, the isometric to the `Isometric` layer and the drawing format to the `Title Block` layer.

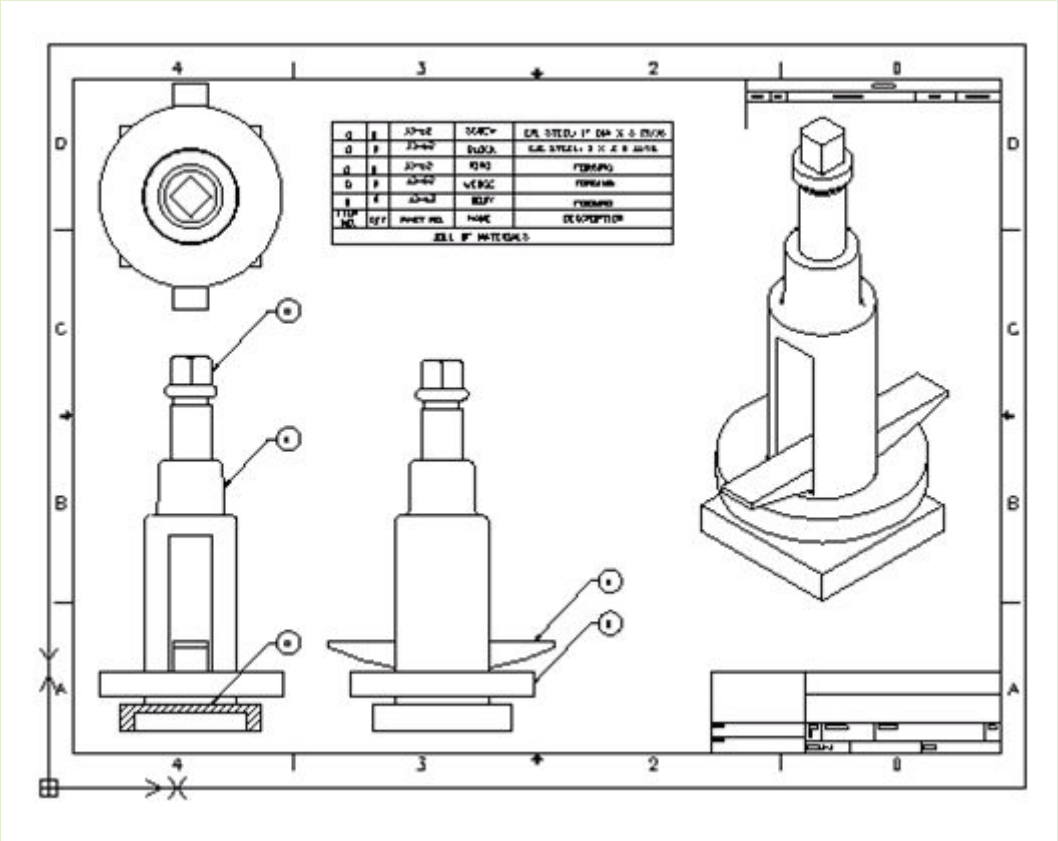

Command Exercise - Change Properties

Estimated time to completion: 10 minutes

Drawing Name: `change2.dwg`

Scope:

Using the **Properties** command, change the radius of the circle to 2, the layer to `Circle`, and the center point to the midpoint of the line. Perform all these changes in the Properties Palette.

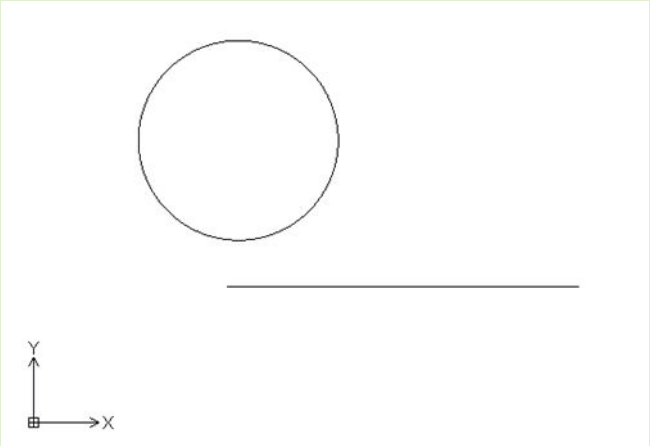

Section 5 Exercise - Organize Your Drawing

Estimated time to completion: 15 minutes

Drawing Name: `Section 5 mcad.dwg`

Scope:

Use the commands you have learned in the past section to organize the drawing into different layers. Create a layer for each part in the assembly. Use the Properties tools to place the corresponding part on the correct layer.

Layer Name	Color
Base	Green
Spacer	Red
Shoulder Pin	Yellow
Hex Bolt	Magenta
Nut	Cyan
Flat Washer	Blue

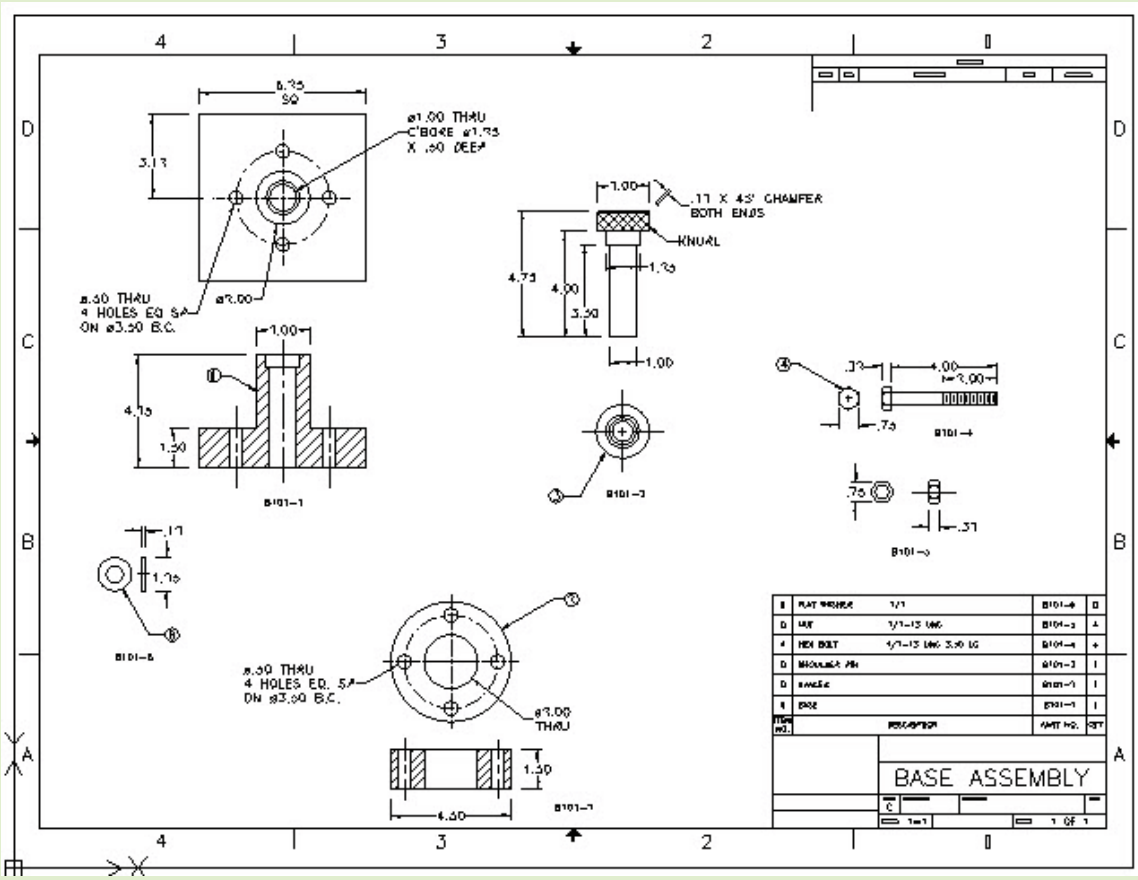

Section 5 Exercise - Object Properties

Estimated time to completion: 15 minutes

Drawing Name: `Section 5 aec.dwg`

Scope:

Move the walls to a yellow layer called `Walls`, the doors to a cyan layer called `doors`, the text to a magenta layer called `text`, the dimensions to a blue layer called `dimensions` and the room contents into a white layer called `room`.

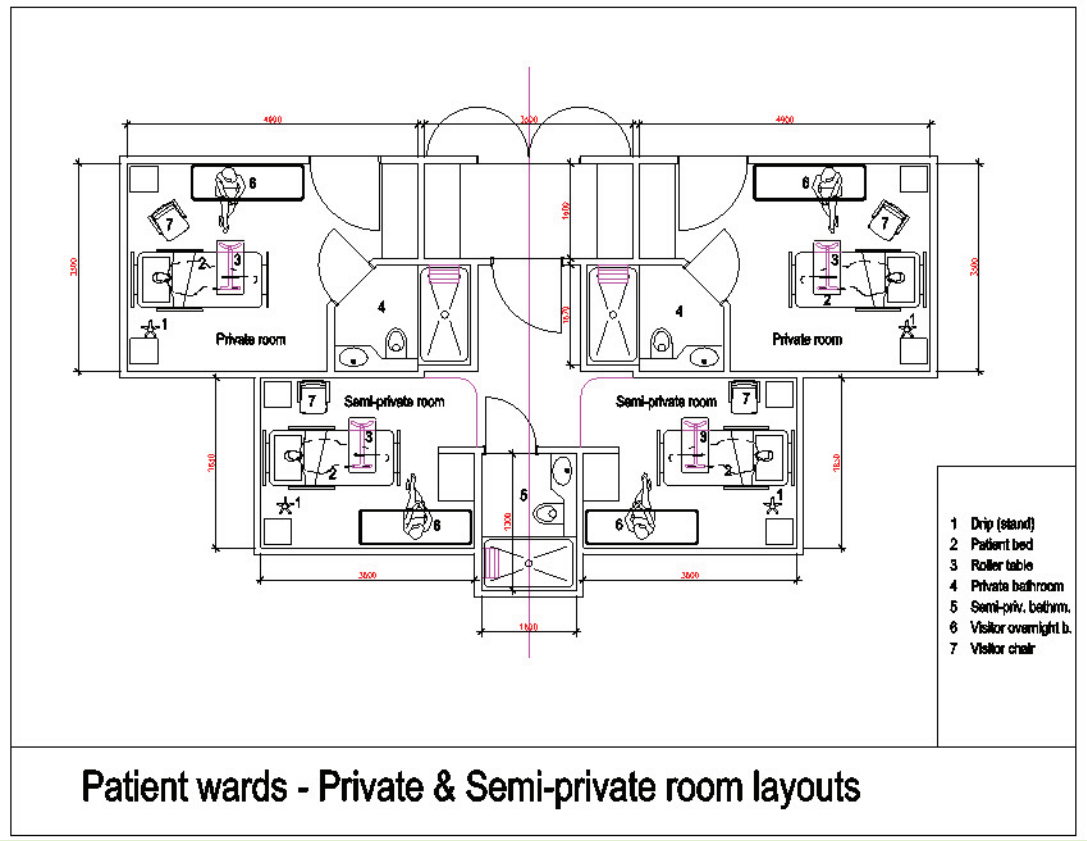

Section 5 Review Questions

1 Identify the following icons and briefly describe each function:

	Icon	Function
a.		
b.		

2 What are the two options (what the image represents and its opposite) for the individual icons in the Layer Manager Dialog box?

	Icon	Function
a.		
b.		
c.		

3 What is the difference between **Freeze** and **Off** when controlling layers?

4 You can turn the current layer **Off**. Can you freeze the current layer? Can you draw on a layer that is **Off**? Try it.

5 What command will remove layers thus decreasing the file size of your drawing?

___ Clean

___ Error Check

___ Sweep

___ Recover

6 What does it mean to choose color ByLayer?

___Entities choose their own color randomly.

___Entities default to the 0 layer and are black or white depending on the graphics window background color.

___Entities take on the color of the current layer they are assigned to.

___Entities take on an assigned color no matter what layer they are on.

7 What does the **LineScale** command do?

8 How can you control the Property Painter command so only specific features are matched, like LineStyle? Try it.

Section 6
Drawing Files

Estimated Class Time: 2 hours

Objectives

This section will review **New**, **Save**, **Save As** and **Open** commands. Files can be managed using Windows-compliant methods such as the cursor menus (**RMB**). File Utilities will Audit, Recover and Purge drawing files.

- **New**

Create a new drawing using DraftSight template settings.

- **Save**

Save the drawing files in drives and folders (directories).

- **Open**

Open an existing drawing.

- **File Management**

Use the standard Windows method of managing files from dialog boxes invoked with Open and Save As commands.

- **File Utilities**

Error-Check, Recover or Clean drawings using the options found in File Utilities.

New

Command Access

Toolbar Menu	Standard / New
Pull-Down Menu	File>New
Command	New
Alias	Ctrl + N
Dialog Box	Specify Template

Command Overview

The simplest method is to start a new drawing from scratch. Another option in the Startup dialog box is to use a drawing template. When launching DraftSight for the first time, it is also possible to open a drawing. DraftSight supports multiple drawing documents. Control which document to view from the Windows pull-down menu. Each new drawing will be named `NONAME_1`, `NONAME_2`, `NONAME_3`, etc. until it is saved, and a drawing name is requested.

General Procedure

1 Click the **New** icon from the Standard Toolbar.
2 Select the appropriate template file and click **OK**.

TIP:

- The system setting **DisplayDialogs** must be set to **YES** to view the Create New Drawing dialog box.
- Pay attention to the drawing name in the DraftSight Title Bar. If it reads `NONNAME_5.dwg`, then it might be that 5 unnamed drawing have been started. Close drawings that are not being used.
- Use the Windows pull-down menu and select the drawing to view when more than one document is open.

Save

Command Access

Toolbar Menu	Standard / Save
Pull-Down Menu	File>Save
Command	Save
Alias	Ctrl + S
Dialog Box	Save file

Command Overview

The **Save** command will save recent changes to the current drawing. The first time the **Save** command is used with an unnamed drawing, the File Save dialog box will appear, which is basically the **Save As** command. Choose the drive, folder, file type and name the new drawing. The file extension for all DraftSight drawings is `.dwg`. Once a drawing file is named, every **Save** will be applied to the current drawing. Drawings will be automatically saved every 10 minutes. This can be changed in **Options**>**System Options**>**Auto Save & Backup**>**Auto-save/backups**. Drawings can be saved as far back as R12 (*.dwg), as well as Data Exchange Files (*.dxf) or as a template drawing (*.dwt).

General Procedure

To Save As a new drawing file:

1. Click **Save As**... from the File pull-down menu.
2. Click the drive, folder, file type and enter the `Name` of the drawing file.
3. Click the **Save** button 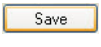 in the dialog box.

To Save a drawing file:

1. Click the **Save** icon on the Standard Toolbar.

TIP:

- Remember to **Save** changes frequently to the current drawing.
- It is not necessary to type the file extension. The file type will be determined by the option in the drop-down list.
- The **DisplayDialogs** variable must be set to **Yes** to view the Save File Dialog box.
- All DraftSight drawings will have a `.dwg` extension regardless of the version selected from the drop-down list (2010, 2004-2006, R12).

Open

Command Access

Toolbar Menu	Standard / Open
Pull-Down Menu	File>Open
Command	Open
Alias	Ctrl + O
Dialog Box	Open

Command Overview

With the **Open** command, files can be accessed from the Open dialog box. Choose the drive and folder to locate a drawing file and select the drawing file, which can be previewed before opening. Once a drawing file is selected, choose Open or double click to open the file.

General Procedure

To Open a drawing file:

1. Click the **Open**... icon on the Standard Toolbar.
2. Locate the drive and folder and select the drawing file to preview.
3. Click **Open** in the dialog box, or double-click the file to Open.

TIP:

- Opened drawing files can be managed from the Windows pull-down menu.
- The **DisplayDialogs** variable must be set to **Yes** to access the **Open** dialog box.
- Drawings can only be previewed if they have been opened in the latest version of DraftSight.

File Management

Command Access

Toolbar Menu	Standard / Open, Standard / New, Standard / Save
Pull-Down Menu	File>Open, File>New, File>Save, File / Save As
Command	Open, Save, New
Alias	Ctrl + O, Ctrl + S, Ctrl + N
Dialog Box	Open, Save file, Specify template

Command Overview

Drawing files can be managed from dialog boxes launched from the Open, Save, Save As or New commands. This is a Windows-compliant feature and works similar to most Windows programs. Select drives, folders, locate files and then right-click (**RMB**) to access the Shortcut menu.

General Procedure

1 Invoke the **Open** or **Save As** command.
2 Select a drawing file, then right click to access the options.

TIP:

- DraftSight drawing files have a `.dwg` extension.
- Picking a drawing file twice will invoke the read-only dialog.
- Typing *.* in the `File Name` text box will display all the file names with any extension (the asterisk is a *wild card*), however, it may not be possible to open all of these files.
- `.dwt` files are template files.
- `.bak` files are backup files.

Command Exercise - File Management

Estimated time to completion: 5 minutes

Drawing Name: `None` (start from scratch)

Scope:

Start a new drawing. Use the `Standard` template. Choose Architectural Units; Precision 1/16", Decimal Degrees; Precision 0, Angle 0 North and Direction Counterclockwise. Set Drawing Boundary to 100'x75'. **Save** the drawing as `NewArch.dwg`. Draw some lines and save the changes. Use the **Save As** command and save the drawing as `NewArch2.dwg`.

File Utilities

Command Access

Toolbar Menu	
Pull-Down Menu	File>Error Check, File>Clean, File>Recover
Command	ErrorCheck, Clean, Recover
Alias	CL (Clean)
Dialog Box	

Command Overview

Use the **Error Check** command to fix errors in the drawing. The **Recover** command will open damaged drawing files and check for errors. **Clean** will delete unreferenced (unused) drawing information, such as Layers, LineStyles, Text Styles, Dimension Styles and Blocks.

General Procedure

To Error Check a Drawing File:

1 Click Error Check from the File Pull-down menu.
2 At the prompt `Automatically fix drawing database errors?`, type **Y** (for **Yes**) and press ↵.

To Recover a Drawing File:

1 Click **Recover...** from the File pull-down menu.
2 Locate the file to recover and click **Open**.

To Clean a Drawing File:

1 Click **Clean...** from the File pull-down menu.
2 In the dialog box, select **Show unreferenced entities**.
3 Set options:
a. **Delete dependent entities:** Removes References and subordinate References that are not referenced by other entities.

b. **Confirm before delete:** Displays the Confirm Clean dialog box for each Reference to discard.

4 Click **Delete to discard the selected References** or Click **Delete All** to discard all unused References.

TIP:

- Unused layers, LineStyles, Text Styles and Dimension Styles can be deleted from the corresponding dialog boxes. This is essentially the same as the **Clean** command.
- Unreferenced Blocks must be cleaned in order to delete them.
- Only unreferenced information can be cleaned or deleted.
- Repeat the **Clean** command several times. It is necessary to **Clean** a Block before a Layer, LineStyle or Text Style referencing the Block can be Cleaned, etc.

Section 6 Review Questions

1 Identify the following icons by writing the name of the command and the toolbar where it is found.

	Icon	Command	Toolbar
a.			
b.			
c.			

2 From what pull-down menu can you access the **Save As**... command?

3 What is the difference between **Save** and **Save As...?**

4 How can you change the Automatic Save variable?

5 Write a brief description for the following file extensions:

Extension	Description
.dwg	
.dwt	
.bak	
.dxf	

Section 7
Advanced Commands

Estimated Class Time: 3.5 hours

Objectives

This section will cover advanced Draw and Modify commands. Most of these commands will be found in the Draw and Modify toolbars.

- **Point** - Points are entities. Seeing them in the drawing depends on the Point Style.
- **Point Format** - The Point Format can be changed to make a point more visible.
- **Mark Divisions** - Mark Divisions along an entity at an equal distance with the MarkDivisions command.
- **Mark Lengths** - Place Points along an entity at a specific distance with the MarkLengths command.
- **PolyLine**- Line and Arc segments can be drawn as a single PolyLine.
- **Explode** - PolyLines can be exploded to create separate Line and Arc segments.
- **Edit PolyLine** - Line and Arc segments can be joined using the Edit PolyLine command.
- **Make Block** - Drawing details can be converted into a symbol, or block.
- **Insert Block** - Once a block is created, it can be inserted into a drawing.
- **Purge** - Use Purge to delete unreferenced Blocks from a drawing.
- **Export Drawing** - Use Export Drawing to create a block from a drawing file.
- **Pattern** - Entities can be made into rectangular or circular patterns.
- **Stretch** - Stretch entities to make them longer or shorter.
- **Edit Length** - Use the Edit Length command to make lines and arcs longer or shorter.
- **Split** - Break sections of an entity using the Split command.
- **Fillet** - Add a radius to the corner of an object.
- **Chamfer** - Add an angle to the corner of an object.
- **Grips** - Grips are editing tools at your fingertips.

Point

Command Access

Toolbar Menu	Draw>Point
Pull-Down Menu	Draw>Point>Options
Command	Point
Alias	PT
Dialog Box	

Command Overview

Points are entities. The Point Format determines how they look on-screen. Choose the Point Format from the dialog box accessed by selecting **Format**>**Point Format** from the Pull-down menu. The default Point Format is a single speck, which is hardly noticeable in the drawing. Once the Point Format is changed to something more apparently visible, use the **Mark Divisions** and **Mark Lengths** to place points at specified increments along a selected entity. Use the **Node** option to **Snap to Points** that are placed in the drawing.

General Procedure

1 Click the **Point** icon on the Draw toolbar.
2 Pick the location of the point in the graphics window.

TIP:

- Use the **Esc** key to exit the **Multiple Point** command.
- Use the **Node Snap** option to snap to points in the drawing.
- Use **Object Snap** or coordinates to precisely place a point in the drawing.

Command Exercise - Point

Estimated time to completion: 10 minutes

Drawing Name: `point1.dwg`

Scope:

Place **Points** using EntitySnaps as indicated in the drawing. Place the point in the middle of the rectangle using **ESnap** and **ETrack.**

Point Format

Command Access

Toolbar Menu	
Pull-Down Menu	Format>Point Style
Command	PointFormat
Alias	
Dialog Box	Options>Drawing Settings>Points

Command Overview

The **Point Format** may be changed at any time. The default **Point Format** is a single speck, which is hardly noticeable in the drawing. Changes made to the Point Format are retained in the drawing.

General Procedure

1 Click **Format**>**Point Style** from the pull-down menu.
2 Select a **Point Type**. The Point Size should be set to **5.00** and **0% relative to display**.
3 Click **OK** to exit.

TIP:

- Choosing a **Point Format** that appears to be blank will not get rid of the points in the drawing. It is best to delete the points that are no longer needed.
- Use the **Node Entity Snap** option to snap to points in the drawing.
- When the **Point Size** is set relative to the size of the screen, a **Rebuild** after zooming in or out will display the point style at the designated percent size.

Command Exercise - Point Format

Estimated time to completion: 10 minutes

Drawing Name: `point2.dwg`

Scope:

Practice changing the **Point Format** to something more visible. **Rebuild** to see the change in your drawing. Set the EntitySnap settings to **Node**, draw a continuous line through the points.

Mark Divisions

Command Access

Toolbar Menu	
Pull-Down Menu	Draw>Points>By Segments
Command	MarkDivisions
Alias	MDIV
Dialog Box	

Command Overview

The **Mark Divisions** command places points on an entity at equal increments, but does not break the entity. If the **Point Format** is set to the default single speck, the **Point** will not be visible, but will still be there. It is better to change the **Point Format** to something you can see. Use the **Node EntitySnap** option to snap points along the divided entity.

General Procedure

1 Click **Draw**>**Points**>`By Segments` from the pull-down menu.
2 Select the entity to divide.
3 Type the **number of segments** and press ↵.

TIP:

- Change the **Point Format** to something more visible.
- Use the **Node EntitySnap** option to snap the points placed along the divided entity.
- **Delete** unwanted **points**. Use the window selection method (left to right) to select the points without selecting other entities.
- Use the **Mark Divisions** command on Lines, Circles, Arcs, PolyLines (rectangles) and Splines.
- A circle will be divided from 0 degrees, and move counterclockwise, depending on the Units setting.

Command Exercise - Measure and Divide

Estimated time to completion: 5 minutes

Drawing Name: `point3.dwg`

Scope:

Measure the top line using one-unit segments. Divide the bottom line into five equal segments.

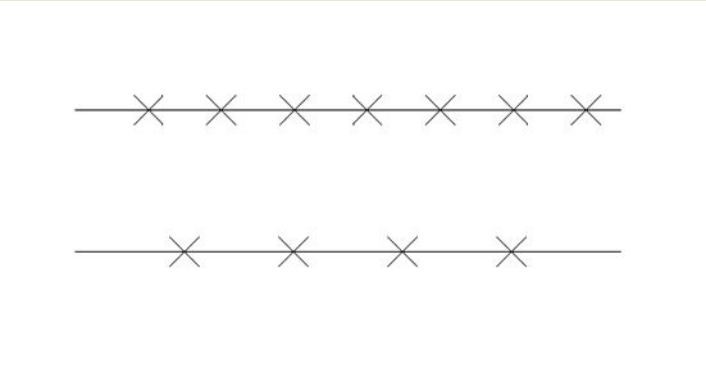

PolyLine

Command Access

Toolbar Menu	Draw / PolyLine
Pull-Down Menu	Draw>PolyLine
Command	PolyLine
Alias	PL
Dialog Box	

Command Overview

PolyLines are essential to drawing in DraftSight. PolyLines are line and arc segments with common endpoints that are joined to make one entity. A **Rectangle** is an example of a polyline. Polylines can be more efficient because selecting one polyline segment will automatically select the entire polyline, and offsetting a polyline will **Offset** all of the segments equally. Sometimes it is necessary to **Explode** a polyline, then use the **EditPolyLine** command to join all the entities. When drawing a polyline, the user will be presented with many command line options, However, for all practical purposes, drawing a polyline is much like drawing a line segment.

General Procedure

1. Click the **PolyLine** icon on the Draw toolbar.
2. Specify a start point.
3. Type **W** and ↵ in order to add **Width** to the line segment.
4. `Specify a starting Width>>` (and ↵) and an ending **Width** (and ↵). The default ending **Width** is usually equal to the starting **Width**, unless drawing an object such as an arrowhead.
5. `Specify the next point>>`, using methods learned in drawing line segments.
6. Optional: Type **U** (and ↵) to **Undo** the last polyline segment without exiting the **PolyLine** command.
7. Optional: Type **A** (and ↵) to invoke the **Arc** option without exiting the **PolyLine** command. Type **L** (and ↵) to return to the **Line** command.
8. Optional: Type **C** (and ↵) to **Close** the **PolyLine**.

TIP:

- It is more typical and usually more practical to draw regular Line and Arc segments, then use the EditPolyLine command to join them.
- When drawing a **PolyLine**, the most common options used are **Width** and **Specify next vertex**.
- The default **PolyLine** width is 0. When the **Width** is changed, it will remain the latest width setting until changed again.
- **PolyLine** starting and ending **Widths** can be specified by picking points in the drawing window.
- Draw **PolyLines** in continuous segments. If the polylines are drawn as separate segements, the intersections will appear jagged. If the polyline is not closed, there will be a jagged edge at that opened intersection.
- Do not cross **PolyLine** segments.

Command Exercise - PolyLine

Estimated time to completion: 10 minutes

Drawing Name: `None` (start from scratch)

Scope:

Using the **PolyLine** command with the Width, Line and Arc options, draw the object indicated with a polyline **Width** of **0.1**. Ortho should be **On**.

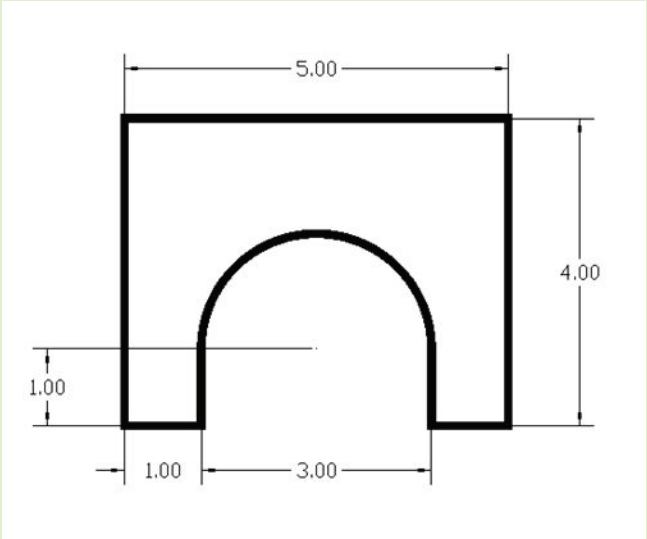

TIP:

- Do not start and stop the **PolyLine** segments. Use the **PolyLine Undo** option if an incorrect endpoint is selected.

Explode

Command Access

Toolbar Menu	Modify / Explode
Pull-Down Menu	Modify>Explode
Command	Explode
Alias	X
Dialog Box	

Command Overview

Use the **Explode** command to break a complex object into its component entities. You can explode **Blocks** and other complex objects like **PolyLines**, **Hatches** and **Dimensions**. Initially, you cannot edit the individual entities that make up a Block or other complex object. If you need to edit one of the entities comprising a complex object, you must explode it into its individual entities.

General Procedure

1 Click the **Explode** icon on the Modify toolbar.
2 Select the entity(s) to Explode and press ↵.

TIP:

- It is typical to **Explode** a **PolyLine** if for some reason it is not possible to modify it. Then use the **EditPolyLine** command to **Join** the line and arc segments back to a polyline.

Edit PolyLine

Command Access

Toolbar Menu	Modify / Edit PolyLine
Pull-Down Menu	Modify>Entity>PolyLine
Command	EditPolyLine
Alias	EDPL
Dialog Box	

Command Overview

Use the **EditPolyLine** command to **Join** line and arc segments with common endpoints to create a single polyline. When using the EditPolyLine command, the user will be presented with many command line options. However, the most common options to use are **Join** and **Width**.

General Procedure

1. Click the **Edit PolyLine** icon on the Modify toolbar.
2. Select a line, arc or polyline.
3. Press ↵ at the prompt `Entity is not a PolyLine. Do you want to turn it into one?`
4. Type **J** for **Join** (and press↵).
5. Specify entities to **Join** (and press ↵).
6. Optional: Type **W** for **Width** (and press ↵).
7. Type the new **Width** for the polyline segments.
8. To complete the command, press ↵ or **X** for **Exit**.

TIP:

- Avoid making separate **PolyLine** segments. As a rule, **polylines** should be **Joined**.
- **Line** and **Arc** segments will be joined to another **PolyLine**, **Line** or **Arc** segment and will automatically be placed on the same layer as the first entity selected.
- Sometimes, because of the complexity of an entity, the **polyline** may have to be exploded to be modified, then edited back to a **PolyLine** again.
- Trimming polylines will also break the polyline at its origin point. Use the **Edit PolyLine** command to join the **polyline** segments.

Command Exercise - Edit PolyLine

Estimated time for completion: 10 minutes

Drawing Name: `edpll.dwg`

Scope:

Using the **Edit PolyLine** command, edit the object on the left: first make one line a **PolyLine**, then **Join** all of the other entities to it. Change the **Width** to **0.5 mm**. **Explode** the object on the right. Try to move it, and note how many lines and arcs are in the object.

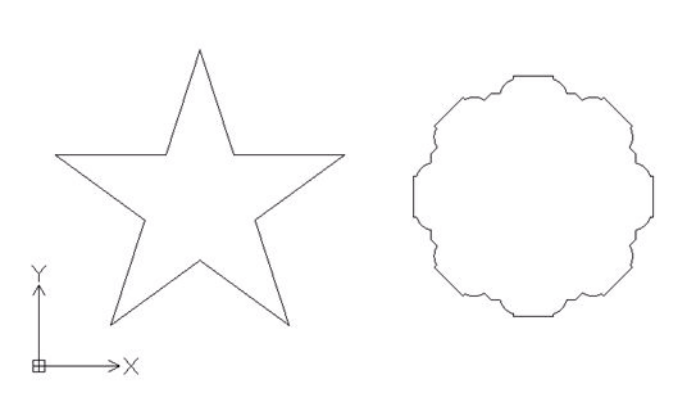

Blocks

Command Access

Toolbar Menu	Draw>Make Block
Pull-Down Menu	Draw>Block>Define
Command	MakeBlock
Alias	BLOCK
Dialog Box	Block Definition

Command Overview

Use the **Make Block** command to make a symbol out of selected entities. From the Block Definition dialog box, specify a **Name**, **Base Point** and the **Entities**. The original entities may seem to disappear from the drawing, depending on the settings specified in the dialog box. However, once a **Block** is made, it can be inserted into a drawing at different **Scales** and **Rotation Angles** with the **Insert Block** command. The **Clean** command must be used to delete unused blocks in the drawing. The **ExportDrawing** command makes a separate `.dwg` file out of a **Block** or drawing detail which can be inserted into any other drawing.

General Procedure

1. Click the **Make Block** icon on the Draw toolbar.
2. Type in the `Name` for the **Block.**
3. Select a **Base Point** on or near the object.
4. Select the E**ntities** to convert to a block.
5. Select **Convert to Block**, then select **OK** to exit the Block Definition dialog box.

TIP:

- Block details cannot be modified other than copied, moved, rotated or scaled unless they are exploded.
- If the **Remove from drawing** option was selected, type **Undelete** to bring the original entities back into the drawing.
- Use **EntitySnap** to pick a base point, or type coordinates. The default base point is absolute 0,0.
- A Block definition exists in the drawing database once it is inserted, even if it is deleted from the drawing. Use the **Clean** command to delete unused Block definitions.
- Blocks containing other blocks are referred to as *nested blocks* and are a good way to manage drawing details. When a block containing nested blocks is inserted into a drawing, the nested blocks automatically become part of the drawing database as individual blocks.
- Redefine the **Block** by making it again using the same name. Redefining a block will automatically update all blocks with the same name that have been inserted into the drawing file.
- Blocks cannot have the same name as the current drawing.

Command Exercise - Block

Estimated time for completion: 5 minutes

Drawing Name: `block1.dwg`

Scope:

Create a **Block** from the object. Name the block `Bolt` and use the intersection of the centerline and the far right vertical line as the insertion point.

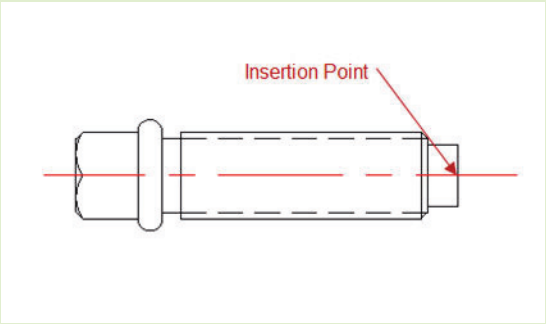

Insert Block

Command Access

Toolbar Menu	
Pull-Down Menu	Insert>Block
Command	InsertBlock
Alias	INSERT
Dialog Box	Insert Block

Command Overview

Use the **Insert Block** command to select a block name from the list of available blocks in the drawing. Specify an insertion point, a scale and a rotation angle, either in the dialog box or in the drawing window. A block may be Exploded when it is inserted, or after it is placed in the drawing. Use the **Clean** command to delete unused blocks from the drawing. The **ExportDrawing** command makes a block definition variable to other drawings by converting the block into a drawing file. When using the **ExportDrawing** command, select the **Browse** button and locate the drive and folder where you want the file to be located.

General Procedure

1. Click **Insert**>**Block...** from the pull-down menu.
2. Select the name of the **Block** from the drop-down list, or click the **Browse** button to insert a drawing file as a block.
3. Check **Specify later** in order to click a screen position for the location of the block.

TIP:

- Clean the drawing of unreferenced blocks, layers, linestyles and the like, as this takes up space in the drawing database.
- Title blocks are typically inserted at the insertion point of **0,0** and a rotation angle of **0**. It is usually a quicker method to insert the title block.
- When specifying the rotation angle of a block in the drawing window, pick an insertion point, then drag the cursor to view the rotation angle. Keep the cursor close to the insertion point to make it easier to view the rotation angle. Pick the desired angle. Pressing ↵ will accept the default rotation angle of **0**.
- Turn the coordinates display **On** (**F6**) to view the distance and angle option. This is a toggle that will display the polar coordinate when in the middle of a command.

Command Exercise - Insert Block

Estimated time to completion: 5 minutes

Drawing Name: `insert1.dwg`

Scope:

Insert the **Bolt** block as indicated in the drawing. Select **Specify later** for **Position**, to pick the insertion point on the screen. The insertion point is the midpoint of the vertical lines of the drilled hole. Do not change the scale factor. Click **Specify later** for **Rotation angle** to be able to rotate the block during insertion.

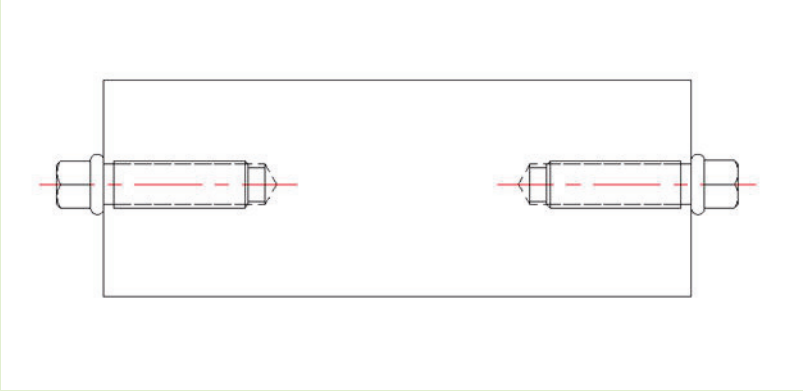

Command Exercise - Insert Block

Estimated time to completion: 5 minutes

Drawing Name: `insert2.dwg`

Scope:

Insert the drawing file, `B_size_sht1.dwg`. Specify the parameters in the dialog box, use an insertion point of **0,0,** a scale factor of **1** and **0** rotation angle.

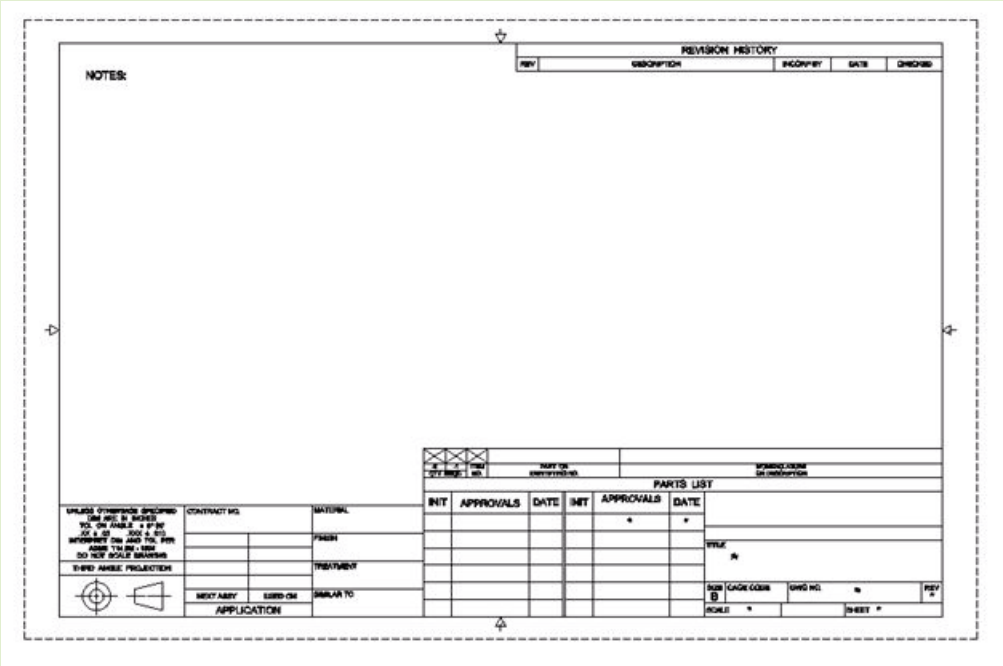

Clean

Command Access

Toolbar Menu	
Pull-Down Menu	File>Clean
Command	Clean
Alias	CL
Dialog Box	Clean

Command Overview

The **Clean** command removes unused references from the drawing. References that can be removed include block definitions, layers, defined drafting styles (such as LineStyles, TextStyles, DimensionStyles and RichLineStyles), and other references as long as they are not referenced by other definitions or entities in the drawing file. You can apply the command to all component types or to selected ones.

Discarding unused references can reduce a drawing's file size. This command is useful before archiving or backing up drawings.

The **Clean** command does not remove defined views or coordinate systems because they are never referenced by another component of the drawing. To remove defined views, use the **Views** command. To remove defined coordinate systems use the **CCS** or **CCSstyle** commands.

You cannot discard the following:

- Layer 0 (there must be at least one layer in the drawing)
- The active layer
- Layers that contain drawing entities
- The LineStyle "Continuous"
- The TextStyle "Standard"

General Procedure

To discard unused references:

1. Click **File**>**Clean** from the pull-down menu.
2. In the dialog box, select **Show unreferenced entities**.
3. Set options:
   - **Delete dependent entities**: Removes References and subordinate References that are not referenced by other entities
   - **Confirm before delete**: Displays the Confirm Clean dialog box for each Reference to discard
4. Click **Delete** to discard the selected References, or click **Delete All** to discard all unused references.

ExportDrawing

Command Access

Toolbar Menu	
Pull-Down Menu	File>Export> Export DWG file
Command	ExportDrawing
Alias	EXPORTDWG
Dialog Box	Save File

Command Overview

You can write entities, a block, or an entire drawing to a new drawing file. You can save a Block or entities as a separate drawing file that you can insert into other drawings.

The **ExportDrawing** command is similar to the **MakeBlock** command, but is mainly used to export blocks, not to define them in the drawing.

General Procedure

To Save Blocks to file:

1. Click **File**>**Export**>**ExportDrawing** from the pull-down menu.
2. In the dialog box, under **Source**, select a source to write to file:
   - **Block**: Lets you select an existing block in the drawing to write to file.
   - **All entities**: Writes the entire drawing to file.
   - **Selected entities**: Writes the entities you select to file.
3. Under **Block UnitSystem**, in **UnitSystem**, select the units to use for automatic scaling when the file is inserted in a drawing that uses different units (see the **UnitSystem** command, block units format option).
4. Under **Entities**:
   - Click **Specify entities icon** and select entities in the graphics area to make up the block.
   - Select an option:

     Convert to Block: Replaces the source entities with a Reference of the Block definition.

     Do not convert to Block: Leaves the source entities in the drawing as they are.

     Delete: Removes the source entities from the drawing.
5. Under **Insertion point**, for X, Y, and Z, type coordinate values or click **Specify** in graphics area to specify an insertion base point in the graphics area.
   The insertion base point is also used as the base for changing the block's scale and rotation.
6. Under **Destination**, select a file name and path where the block or entities are saved, or click **Browse** to locate a destination folder and type a `File name`.

Command Exercise - Export Block

Estimated time to completion: 5 minutes

Drawing Name: `export1.dwg`

Scope:

Using the **ExportBlock** command, export the detail that resembles the title block (red entities). Name the file `C_size_sht1.dwg`, and be sure to add it to your current folder. Select the lower left corner as the reference point, and select all of the entities needed.

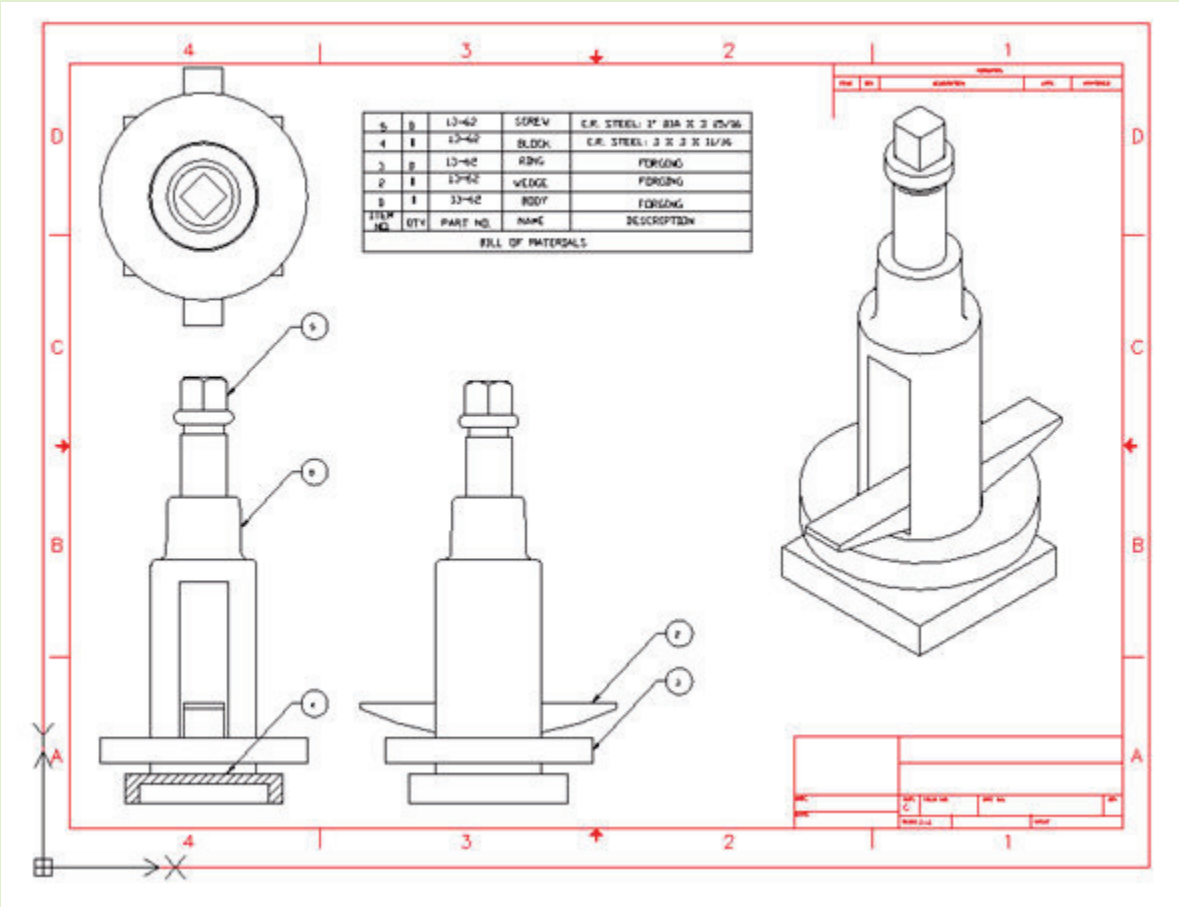

Hatch

Command Access

Toolbar Menu	Draw / Hatch/Fill...
Pull-Down Menu	Draw>Hatch/Fill...
Command	Hatch
Alias	H
Dialog Box	Hatch/Fill

Command Overview

Use the **Hatch** command to fill enclosed areas or specified entities with a hatch pattern. Hatching a drawing adds meaning and helps to differentiate the materials and areas. Some drawing applications such as construction drawings require hatch patterns which can increase the clarity and legibility of a drawing. Along with patterns, you can apply solid hatches to fill in a bounded area with the current color by selecting Solid from the Pattern list.

General Procedure

To set a hatch pattern:

1. Click the **Hatch/Fill...** icon on the Draw toolbar.
2. In the Hatch/Fill dialog box, from the **Type** list, select a pattern type.
   Predefined: Lets you select from predefined patterns, including ISO and ANSI conforming patterns, as well as patterns commonly used in specific industries.

   User-defined: Lets you select a pattern you or your enterprise created.

   Custom: Lets you specify a pattern determined by your Angle and Spacing specifications.
3. If you selected a **Predefined** type from the **Pattern** list, select a pattern.
   The Preview pane beside the Pattern list displays the selected pattern.

   You can instead use the **Select Pattern Style** dialog box to select a type and a pattern.

To set the angle and scale the hatch pattern:

1. In the **Angle** list, specify an angle for the hatch pattern.
   Standard hatch patterns are made up of horizontal or vertical lines or drawn at an angle. A hatch angle of **0** degrees defines a horizontal line. The Angle list contains angle values between **0** and **360** in **15** degree increments. A positive angle rotates the pattern counter-clockwise.
2. Use the **Scale** list to specify a value by which to scale the hatch pattern.
   The Scale list contains values between **.25** and **2** in .**25** unit increments (default is **1**). For example, 2 doubles the distances in the pattern and .25 reduces the original dimensions by 1/4.

   Note: User-defined patterns cannot be scaled. To change distances in user-defined patterns, use the Spacing list.

3 If you selected a User-defined type, in Spacing specify the distance between lines in the hatch pattern.
Specify the distance in drawing units (default is 1). Change the line spacing to customize the pattern proportions for specific graphics areas.

4 If you selected an ISO Pattern type, use the ISO pen width list to select a pen width.

5 Click **Scale** based on the sheet's units to adapt the units to the sheet.
To set the hatch pattern start point:

6 Specify a pattern start point.
Current drawing origin: Keeps the current hatch origin (default).

User-defined location: Click the Specify coordinates icon to specify a point in the graphics area or select a location from the Use **Boundary** list.

To save the specified location, click Set as default.

To set boundaries for hatch patterns:

1 Select a method to specify boundaries.
Specify entities: Lets you select the entities that form the boundary.

Specify points: Lets you click points in enclosed areas to define the boundaries.

Rebuild boundary: Replaces a boundary after removing (enabled only when using the EditHatch command).

Delete boundary entities: Removes boundaries from the set of entities that form the boundaries.

Highlight boundary entities: Displays the boundaries in the drawing.

2 To further customize hatch pattern options:
- Select **Keep hatch and boundary related** to update hatch patterns automatically if the boundary of the hatch changes (default).
- Select **Create hatch for each boundary** to generate distinct hatches with the same properties if you are adding boundaries of several areas at once. Do not enable this option if one connected hatch is required.
- Use properties of a selected hatch by clicking the icon and specifying a hatch in the drawing.
- Select a placement for hatches in relation to their boundaries. Select **Bring to Front**, **Send to Back**, **Bring in Front of Boundary**, **Send Behind Boundary** (default) or **Do Not Assign**.

3 Click Additional Options to apply any of the following:
- Click **Find internal regions** to detect internal closed boundaries.
- Click a hatch Display style.

Out: Creates hatch patterns only in the outermost areas.

In/Out: Creates hatch pattern between alternate areas, starting with the outermost area (default).

Ignore: Ignores the internal structure and hatches the entire area. Hatch lines pass through text, block attributes and 2D solids.

The following diagram illustrates the **In/Out**, **Out** and **Ignore** styles.

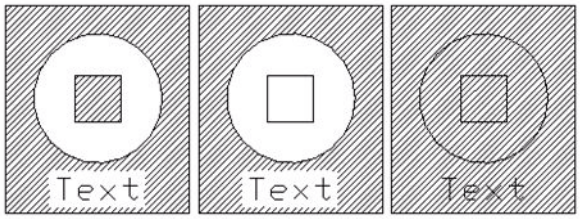

- Select a default Origin setting.

Use current: Uses the origin point for the hatching specified with the current Hatch command.

Use source: Uses the origin of existing hatches.

- Specify a maximum gap size.
- Select from the boundary group list.
- Click **Keep boundaries** to maintain the initial closed contour normally deleted when a hatch is created. From the **Type** list, select whether the boundary contour is created as **PolyLine** or **Region**.

TIP:

- **Boundary hatch** will fill only closed objects.
- Use a hatch scale makes sense for the drawing. If the drawing area is 12x9, then a hatch scale of 1 makes sense. If the drawing area is 120 x 90, then a hatch scale of 10 might be more reasonable.
- Do not explode hatch patterns. This will produce hundreds, sometimes even thousands, of separate lines.
- A hatch pattern that is moved from its boundary will no longer be associated with that boundary.
- Hatch boundaries can be deleted.
- Hatch patterns placed in several locations at once will be *connected*. Deleting one hatch pattern will delete them all.

Command Exercise - Hatch

Estimated time to completion: 5 minutes

Drawing Name: `hatch1.dwg`

Scope:

Place **Hatch** patterns in the object as indicated. Use the **Specify points** option for the boundary.

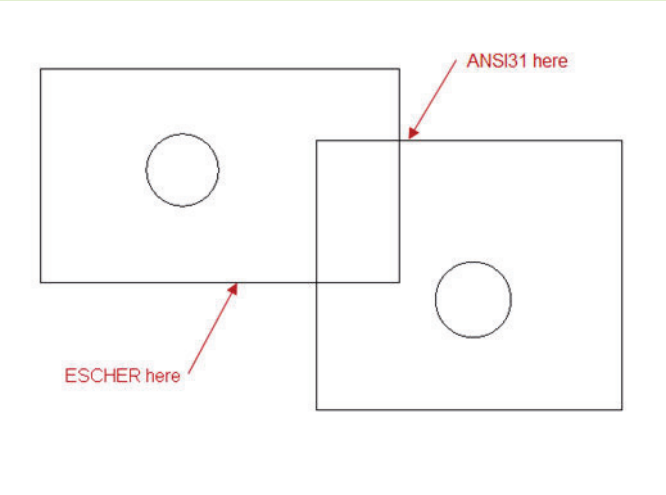

Command Exercise - Hatch

Estimated time to completion: 5 minutes

Drawing Name: `hatch2.dwg`

Scope:

Place **Hatch** patterns in the objects. Use the properties from the existing Hatch pattern. Use the **Specify entities** option to select the boundary.

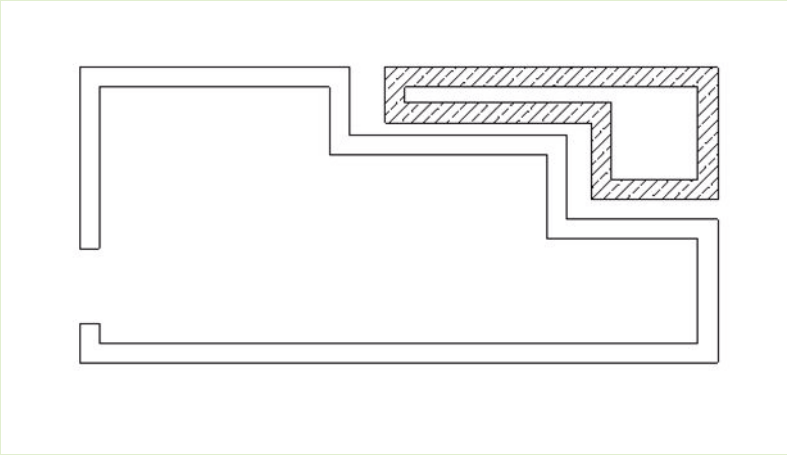

Command Exercise - Edit Hatch

Estimated time to completion: 5 minutes

Drawing Name: `ehatch1.dwg`

Scope:

Edit the **Hatch** patterns as indicated.

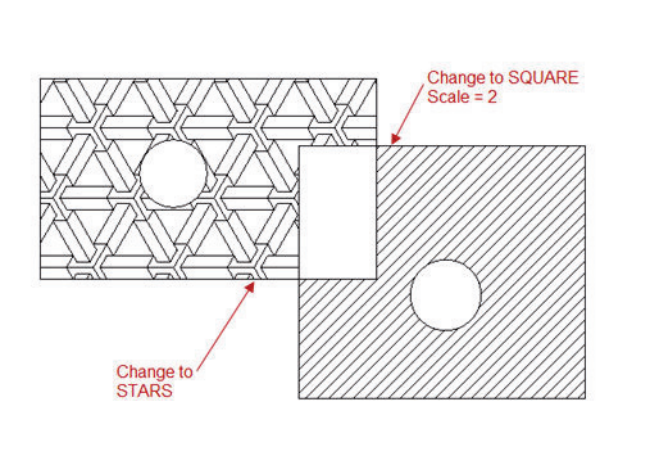

Pattern

Command Access

Toolbar Menu	Modify / Pattern
Pull-Down Menu	Modify>Pattern...
Command	Pattern
Alias	PAT
Dialog Box	Pattern

Command Overview

Use the **Pattern** command to create copies of specified entities in a linear matrix or circular pattern. The created entities inherit all properties of the original entities such as Layers, LineColors, LineStyles and LineWeights.

General Procedure

To create a linear pattern:

1 Click the **Pattern** icon on the Modify toolbar.
2 In the dialog box, click **Select entities**, select the entities to generate the pattern, and press <↵>to complete the selection.
The dialog box disappears until your selection is complete.
3 Under **Pattern type**, select **Linear**.
4 Under Settings:
- For **Horizontal axis** and **Vertical axis**, type the number of elements.
- For S**pacing between elements on**, define spacings between the elements and an angle for the pattern.

Horizontal axis: Specifies the distance between columns. Click the **Select column offset** icon to identify the offset using two points in the drawing. If the column offset is a negative value, columns are added to the left.

Vertical axis: Specifies the distance between rows. Click the **Select row offset** icon to identify the offset using two points in the drawing. If the row offset is a negative value, rows are added downward.

Pattern angle: Specifies the angle to control how the copies are arranged. Click the **Select angle** icon to specify the angle using the pointer.

5 Click **OK**.

To create a circular pattern:

1 Click the **Pattern** icon on the Modify Toolbar.
2 In the dialog box, click **Select entities**, select the entities to generate the pattern, and press<↵>to complete the selection.
The dialog box disappears until your selection is complete.
3 Under **Pattern type**, select **Circular**.
4 Under **Settings**, set as follows:
Base pattern on

Angle between if required. Angle between is the included angle between the base points of the pattern entities and the center of the pattern. Type a positive value or click **Pick Angle between items**.

Fill angle if required. Type a positive or negative value or click **Pick Angle To Fill**. The default for the angle to fill is **360** a full circle pattern. A value of zero is not allowed. The pattern is drawn counterclockwise for positive angles and clockwise for negative angles.

Total number if required. The number of items includes the original entity.

5 Under **Element base point**, set the following:
Use last entity selected: Uses the base point from the last item you selected.

X and Y: Type values or click **Pick Base Point**.

6 Under **Axis point**, for X and Y, type values for the center point of the pattern or click **Pick Center Point**.
7 Select **Orient elements about axis** to rotate the entities as they are patterned, otherwise they maintain the alignment of the source entity.
8 Click **OK**.

TIP:

- For a rectangular pattern, a negative distance between columns will create a pattern in a negative direction (right to left). A negative distance between rows will produce a pattern in the negative Y direction (below one another).
- For a circular pattern, a negative angle will create a pattern in a counter-clockwise direction.
- For a rectangular pattern, one row or one column will make a pattern in one direction only.
- The **InsertBlockN** command will insert blocks in rows and columns.

Command Exercise - Rectangular Pattern

Estimated time to completion: 5 minutes

Drawing Name: `pattern1.dwg`

Scope:

Create a 3 x 2 **Rectangular Pattern** of the entity using a spacing of **1.5**.

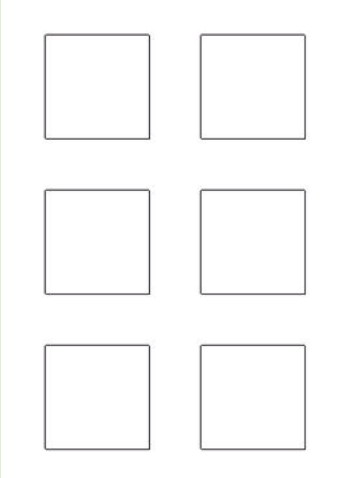

Command Exercise - Circular Pattern.

Estimated time to completion: 5 minutes

Drawing Name: `pattern2.dwg`

Scope:

Make a **Circular Pattern** of the hex head as indicated on the drawing. The number of items is **8** (total).

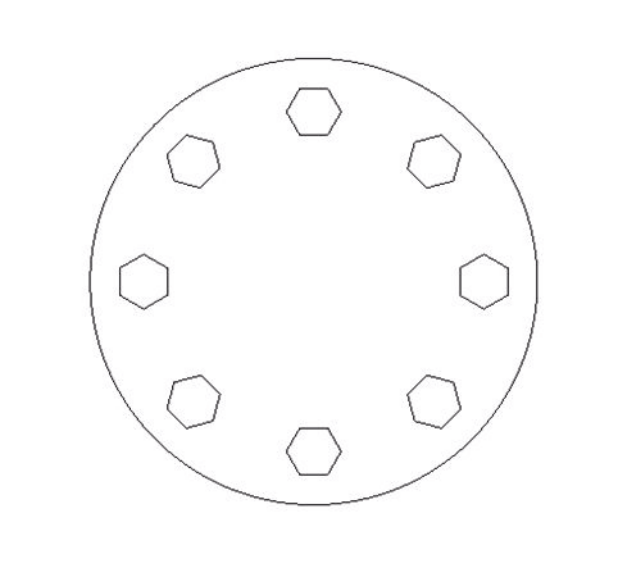

Stretch

Command Access

Toolbar Menu	Modify / Stretch
Pull-Down Menu	Modify>Stretch
Command	Stretch
Alias	S
Dialog Box	

Command Overview

Learning how to use the **Stretch** command is tricky at first. Always use a crossing window or crossing polygon to select the entities to be stretched. The endpoints or vertices of the entities selected will be stretched, or moved to a new location, while the endpoints of vertices outside of the selection window will remain anchored. Once the entities are selected, press <↵> and pick a base point, then with Ortho **On**, drag the entities to the desired destination.

General Procedure

1. Click the **Stretch** icon on the Modify toolbar.
2. Select the entities by using a crossing window (right to left), or a crossing polygon. Frame the object so that the endpoints to be moved are completely within the selection box.
3. Pick a base point.
4. Select the second point of displacement, or drag the cursor in the desired direction (with Ortho **On**), and type in the distance.

TIP:

- Circles cannot be stretched with this command, but can be stretched using grips.
- Entities that are completely within the selection window will be moved.
- If a crossing window is not used, only the entities completely within the window will be moved, not stretched.
- Blocks cannot be stretched.
- When selecting the second point of displacement, use the direct distance method with Ortho **On**. Drag the cursor in the desired direction and type the distance.
- When selecting points (base point or second point of displacement), picking points with or without EntitySnap, Relative Coordinates or Polar Coordinates are all acceptable methods. However, the direct distance with Ortho **On** works the best.

Command Exercise - Stretch

Estimated time to completion: 5 minutes

Drawing Name: `stretch 1.dwg`

Scope:

Use the crossing window to select the entities to **Stretch**.

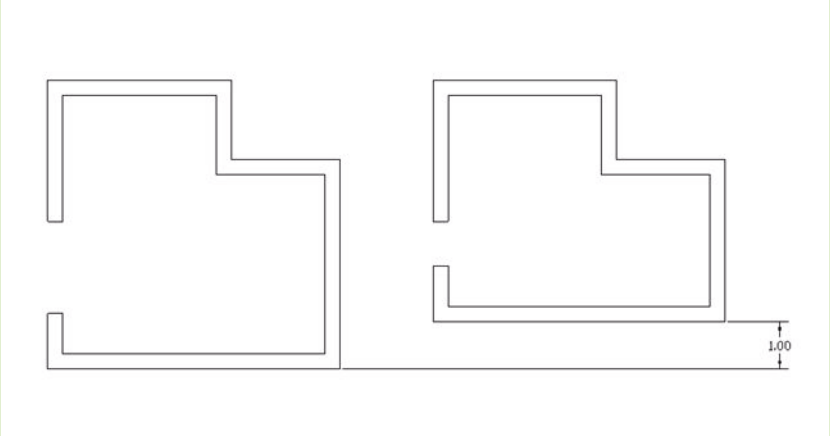

TIP:

- Notice that the line segments that are fully constrained in the crossing selection window are moved. The lines that are crossed are stretched.

Change Length

Command Access

Toolbar Menu	
Pull-Down Menu	Modify>Change Length
Command	EditLength
Alias	EDLEN
Dialog Box	

Command Overview

Use the **Change Length** command to find the current length on an entity or to increase or decrease the length of the selected entity. Type the capitalized letter(s) to initiate the command line options.

General Procedure

1. Invoke the **Change Length** command by selecting **Modify**>**Change Length** from the pull-down menu.
2. Type the letter of the command line option and type the desired length as requested.
   - Select the entity towards the end to be lengthened or shortened.

TIP:

- The **Change Length** command is the only way to dynamically stretch a line without changing the angle of the line.
- It is not possible to edit the length of a closed object.

Command Exercise - Change Length

Estimated time to completion: 5 minutes

Drawing Name: `lengthl.dwg`

Scope:

Use the **Dynamic**, **Increment**, **Percent** and **Total** options to edit the length of the line and arc.

Use the following sequence to complete this exercise:

1. Click **Modify**>**Change** L**ength** from the pull-down menu.
2. Pick the line with the **LMB.** (Note the active length is displayed in the command window.)
3. Pick the arc with the **LMB.** (Note the Active length and included angle are displayed in the command window.)
4. **Right-click** in the graphics window and select increment
5. Enter a value of **2** and press <↵>.
6. Pick each end of the line. Notice how it increases by **50 mm** each time.
7. Press <↵> to exit the command.
8. Type **U** and <↵> to **Undo** the last edit.
9. Invoke the **Edit Length** command again.
10. **Right-click** in the drawing window and select **Percent**.
11. Type **50** and <↵>.
12. Pick the line with the **LMB**. Notice how the length of the line is **50 percent** of the original each time.
13. Select the arc with the **LMB**. Notice how the length of the arc changes by **50 percent** each time you select it.
14. Press <↵> to exit the command.
15. Type **U** and <↵> to **Undo** the last edit.
16. Invoke the **Edit** L**ength** command again.
17. **Right-click** in the drawing window and select **Total**.
18. Type **7** and press <↵>.
19. Pick the line. Notice how the length of the line changes.
20. Pick the line again. Notice how the line does not change this time.
21. Pick the arc. Notice how the length of the arc changes.
22. Pick the arc again. Notice how the length of the arc does not change.
23. Press <↵> to exit the command.
24. Type **U** and <↵> to **Undo** the last edit.
25. Invoke the **Edit Length** command again.
26. **Right-click** in the graphics window and select **Dynamic**.
27. Pick the line with the **LMB** and move the cursor.
28. Press the **LMB** to continue.
29. Pick the arc with the **LMB** and move the cursor.
30. Press the **LMB** to continue.
31. Press <↵> to exit the command.

Split

Command Access

Toolbar Menu	Modify / Split
Pull-Down Menu	Modify>Split
Command	Split
Alias	BR
Dialog Box	

Command Overview

Split a line, circle, arc or polyline by selecting two points on that entity. This will leave a gap, or opening, between the two points selected.

General Procedure

Simple Split:

1 Click the **Split** icon on the Modify toolbar, (Select the entity at the first split point.)
2 Select the second split point.

To Split an entity at an intersection:

1 Select the **Split** icon on the Modify Toolbar
2 Select the entity to split.
3 Type **F** for **First** split point.
4 Use the **Intersection EntitySnap** and pick an intersection.
5 For the second split point, pick another position on the line.

TIP:

- Circles will split in a counterclockwise direction unless the **Drawing Units Angle** option is set to clockwise.

Command Exercise - Split

Estimated time to completion: 5 minutes

Drawing Name: `split1.dwg`

Scope:

Split the lines as indicated.

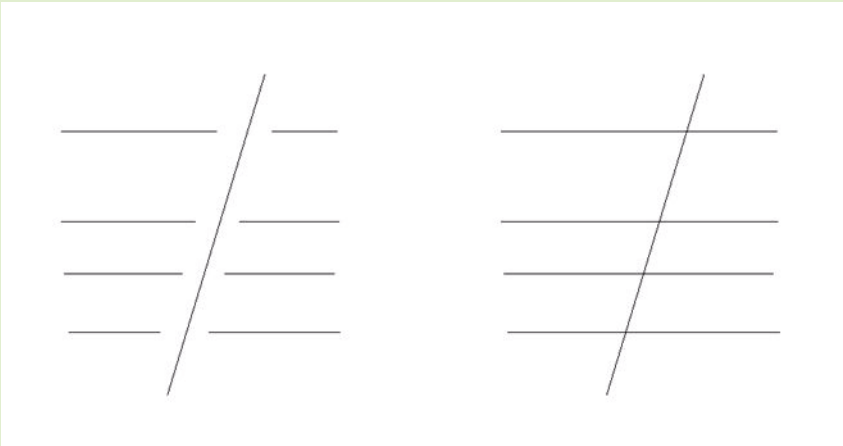

TIP:

- The location where you select the entity is the first split point. You can use EntitySnaps when selecting points. You may also use relative coordinates to break a specific distance. Example: `@1<0` will take a one-unit segment out of a horizontal line relative to the last point picked.

Fillet

Command Access

Toolbar Menu	Modify / Fillet
Pull-Down Menu	Modify>Fillet
Command	Fillet
Alias	F
Dialog Box	

Command Overview

Radius corners with the **Fillet** command. Clean up corners with a **Fillet** radius set to **0**.

General Procedure

1 Click the **Fillet** icon on the Modify toolbar.
2 To change the default radius, type **R** and <↵>.
3 Type the desired radius and press <↵>.
4 Select the first entity, and then select the second entity.

TIP:

- It is not necessary to set the radius to fillet parallel lines.
- Fillet will not work if the lines or arcs are separate polylines, or at the arc intersections of polylines. However, **Fillet** will work if the first line selected is a polyline and the second line or arc selected is not a polyline. The second entity will be filleted and be joined to the polyline.

Command Exercise - Fillet

Estimated time to completion: 5 minutes

Drawing Name: `fillet1.dwg`

Scope:

Use the **Fillet** command with a radius of **0** to clean up the corners of the lines as indicated. Remember to change the fillet radius first.

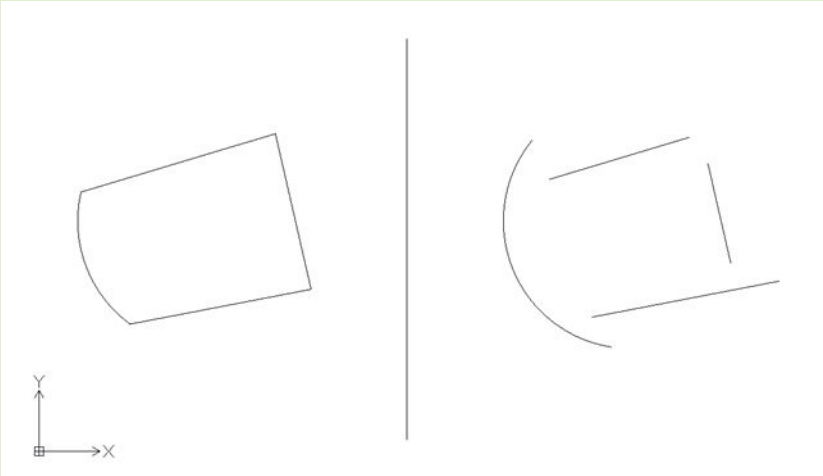

TIP:

- Select the lines towards the end that you want to fillet. Remember to repeat the command with the **RMB**.

Command Exercise - Fillet

Estimated time to completion: 5 minutes

Drawing Name: `fillet2.dwg`

Scope:

Fillet the corners of the object with a filler radius of **0.5**.

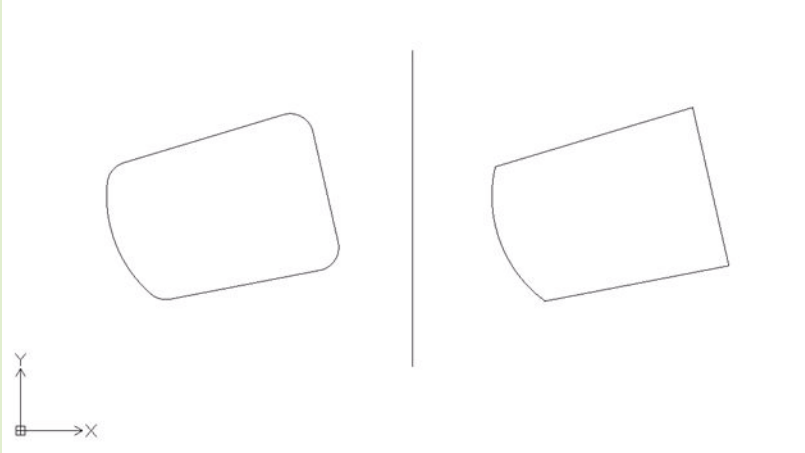

TIP:

- Notice you cannot select all of the segments in one step. You must repeat the **fFllet** command for each corner, unless the entity is a polyline and the **Fillet** command is used with the polyline option. Try it on a rectangle.

Chamfer

Command Access

Toolbar Menu	Modify / Chamfer
Pull-Down Menu	Modify>Chamfer
Command	Chamfer
Alias	CHA
Dialog Box	

Command Overview

Chamfer adjacent lines. Set the **Chamfer Distance** or **Chamfer Angle**. Select the adjacent lines to chamfer or select the polyline.

General Procedure

1 Click the **Chamfer** icon on the Modify toolbar.
2 Type **D** for the **Distance** option (and <↵>).
3 Type the first chamfer distance (and <↵>), then the second chamfer distance (and <↵>).
4 Select the first entity, then the second entity.

TIP:

- **Chamfer** will not work if the lines are separate polylines.
- **Chamfer** will work if the first line selected is a polyline, but the second line is not. The second entity will chamfer and be joined to the first polyline.
- **Chamfer** with a distance of **0** will clean up corners.

Command Exercise - Chamfer

Estimated time to completion: 5 minutes

Drawing Name: `chaml.dwg`

Scope:

Chamfer the corners of the entities as indicated in the drawing.

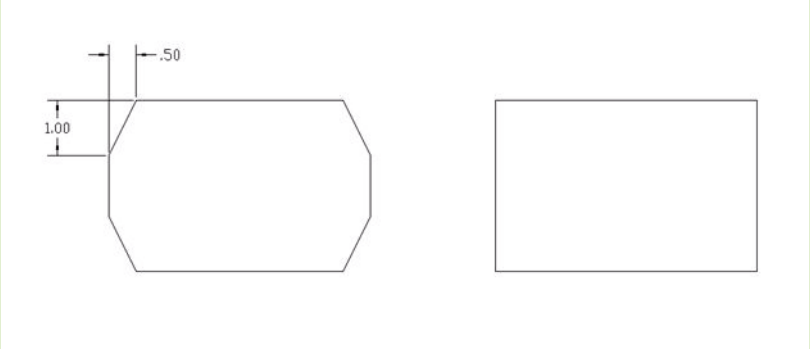

EntityGrips

Command Access

Toolbar Menu	
Pull-Down Menu	
Command	Select entity with command line blank
Alias	
Dialog Box	

Command Overview

EntityGrips (EGrips) are selectable handles (displayed as small squares) at the end points, center, vertices, insertion points and other geometric points of entities.

The location of EntityGrips depends on the entity. For example, a circle displays an EntityGrip at the center and four EntityGrips on the circumference.

EntityGrips are not accessible on drawing entities on locked Layers.

You use EntityGrips to drag defining points of entities to new positions (stretching), or to move or copy entire entities.

General Procedure

To use EntityGrips:

1. With the command line blank, click the drawing entities you want to modify.
2. Stretch the entity by moving the activated **EGrip** to another location and click on the drawing.
   For EGrip edit mode, you can make these settings:

   Base point: Specifies a base point other than the highlighted base EGrip.

   Copy: Leaves the specified entity at its current location as you modify a copy.

   Undo: Cancels the previous EGrip editing action as long as one or more EGrips are highlighted.

   Exit: Terminates EGrip editing. Highlighted modification EGrips disappear, but selection EGrips still display.
3. To clear EGrips from the specified entity or set of entities, press **Esc**.

To stretch multiple entities using EntityGrips:

1. Hold down **Shift** and click several EGrips to highlight them.
2. Release **Shift**.
3. Specify one EGrip as the base grip.
4. Move the base grip to another location and click on the drawing.

To set EntityGrip preferences:

1 Click **Tools**>**Options** (or type Options).
2 In the Options dialog box, click `User Preferences`.
3 Expand **Drafting Options**>**Entity Selection**.
4 Expand **EGrips** Options to do the follwing:
   - Enable EntityGrips (EGrips)
   - Enable EGrips in Blocks
   - Enable EGrip tips
   - Set the EGrip display limit (the maximum number of entities displayed with EGrips)
5 Expand EGrips Colors to set colors for these items:
   - Active EGrips
   - Inactive EGrips
   - Mouseover EGrips (the color of the EGrip when the pointer moves over an EGrip)
6 Expand EGrips Size to set the display size of EntityGrips.
7 Click **OK**.

TIP:

- When an entity has been selected and the **Egrips** are highlighted, press **Esc** to exit Egrips.
- Pressing the **Shift** key while picking a selected entity will deselect that entity, but keep the Egrips active.
- Active Egrips can be used as snap or base points.
- Pressing <↵> with no Egrips selected will recycle the previous command.
- Stretch is the default group option.
- Use a quadrant grip to make a circle larger or smaller.
- Use **Egrips** to adjust **Dimensions** and the **Width** of a **Note**.
- A selected **Egrip** will appear solid in color (the default color is red). Only one Egrip may be selected at a time.

Command Exercise - Egrips

Estimated time to completion: 5 minutes

Drawing Name: `egrip1.dwg`

Scope:

Edit entities as indicated using **Egrips** (command line must be blank). **Stretch** and **Copy** the circles. **Move** and **Copy** the lines.

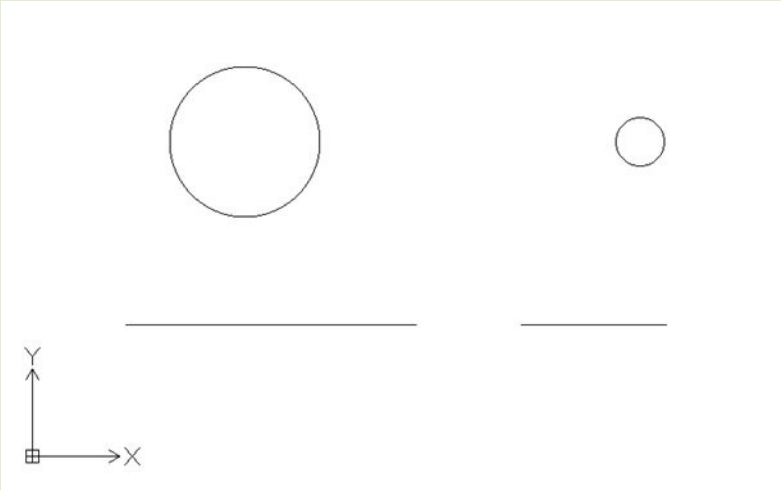

Command Exercise - Egrips

Estimated time to completion: 5 minutes

Drawing Name: egrip2.dwg

Scope:

Use **Egrips** to stretch the polyline vertices to the nearest points.

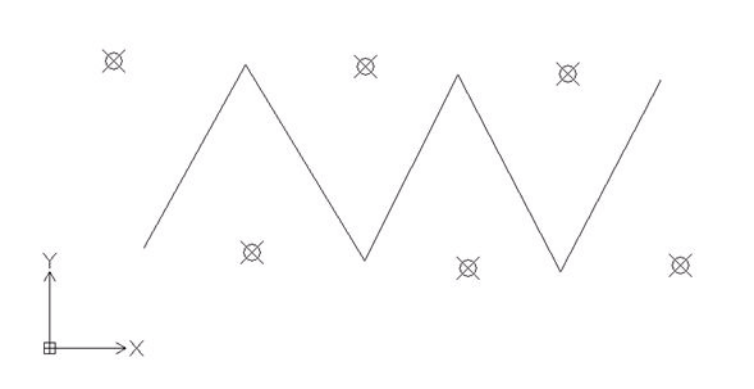

Egrip Settings

Command Access

Toolbar Menu	
Pull-Down Menu	Options>User Preferences>Drafting Options>Entity Selection
Command	
Alias	
Dialog Box	Options

Command Overview

Egrips must be enabled in order to work. Use the **Entity Selection** to control Egrip settings. The default setting when starting a new drawing is that Egrips are already enabled. When **Enable Egrips in Blocks** is selected, all of the relevant EGrips within a selected block will be, rather than a single insertion point. Unselected and selected EGrip colors can be changed by picking a new color from the drop-down list. The EGrip size may also be selected by sliding the box to the left or right to make it smaller or larger.

General Procedure

1 Click **Tools**>**Options**>**User Preferences**>**Drafting Options**>**Entity Selection**
2 Choose the desired setting to be changed (EGrip options, EGrip color or EGrip size).

TIP:

- EGrips must be enabled to format note paragraphs and adjust dimensions.
- Using **EGrips** should be relatively easy once the individual **Modify** commands have been learned.

Section 7 Review Questions

1 Identify the following icons by writing the name of the command and the toolbar where it can be found.

	Icon	Command	Toolbar
a.			
b.			
c.			
d.			
e.			
f.			
g.			
h			
i			

2 In what pull-down menu can you access the EGrips dialog (for enabling or disabling EGrips)?

3 In what pull-down menu can you access the **Point Format** dialog to change the Point Format?

4

a. What does the **Clean** command do?

b. In what pull-down menu can you access the **Clean** command?

c. What can you type to invoke the **Clean** command?

Section 8
View Commands

Estimated Class Time: 1 hour

Objectives

This section will cover the different ways to view drawings. Learn to **Pan** and **Zoom** in real time, and use other zoom options. Views can be named and saved, then restored. The drawing window can be sectioned into multiple viewports.

- **Dynamic Pan**
Pan the drawing with the motion of the cursor in real time.
- **Dynamic Zoom**
Zoom the drawing with the up and down motion of the cursor in real time.
- **Zoom Window**
Make a zoom window around an area to view up close.
- **Zoom Options**
Additional zoom options are located in the fly-out on the Standard Toolbar.
- **Rebuild**
Regenerate the drawing to smooth out circles and arcs.
- **Named Views**
Name and Save the drawing views and make them current when needed.
- **Multiple Viewports**
Display different views of the drawing in multiple viewports.

Dynamic Pan

Command Access

Toolbar Menu	Standard / Dynamic Pan
Pull-Down Menu	View>Pan>Dynamic Pan
Command	Pan
Alias	P
Dialog Box	

Command Overview

With the **Dynamic Pan** command, pick a point in the drawing window, press the **LMB** and drag the drawing view in real time. **Right-click** (**RMB**) to access the Shortcut menu and select **Exit**, or one of the other options. The **Esc** key will also exit the **Dynamic Pan** command.

General Procedure

1 Click the **Dynamic Pan** icon on the Standard Toolbar.
2 Pick a point in the drawing window (**LMB**), press and drag to pan the view.
3 Right-click (**RMB**) to access the Shortcut menu and click **Exit**.

TIP:

- The Shortcut menus for **Dynamic Pan** and **Dynamic Zoom** are identical.
- When dragging the cursor in **Dynamic Pan**, the mouse can be picked up and relocated in the drawing window, if the cursor reaches the edge of the drawing window.

Dynamic Zoom

Command Access

Toolbar Menu	Standard / Dynamic Zoom
Pull-Down Menu	View>Zoom>Dynamic
Command	
Alias	
Dialog Box	

Command Overview

With the **Dynamic Zoom** command, pick a point in the drawing window. Drag the mouse up or down to zoom in or out. Right-click (**RMB**) to access the Shortcut menu and select **Exit** or one of the other options. The **Esc** key will also exit the **Dynamic Zoom** command.

General Procedure

1. Click the **Dynamic Zoom** icon on the Standard Toolbar.
2. Pick a point in the drawing window (**LMB**), press and drag up to zoom in and down to zoom out.
3. Right-click (**RMB**) to access the Shortcut menu and select **Exit** or one of the other options.

TIP:

- Remember to drag up to zoom in and down to zoom out.
- When you drag the cursorin **Dynamic Zoom**, the mouse can be picked up and relocated in the drawing window if the cursor reaches the top or bottom of the drawing window.

Zoom Window

Command Access

Toolbar Menu	Zoom / Zoom Window
Pull-Down Menu	View>Zoom>Window
Command	Zoom
Alias	Z
Dialog Box	

Command Overview

Use the **Zoom Window** command to view a selected area of the drawing.

General Procedure

1 Click **View**>**Zoom** from the pull-down menu.
2 Pick the first corner of the view window, then drag the mouse and pick the opposite corner.

TIP:

- When the **Zoom Window** command is invoked, the opposite corner of the window must be made or press **Esc** to cancel the **Zoom** command.
- When invoking the **Zoom Window** command, the **Window** option is a default. Just begin the first corner of the zoom window.
- **Zoom** commands can be used while in the middle of other commands.

Zoom Previous

Command Access

Toolbar Menu	Standard / Zoom Previous
Pull-Down Menu	View>Zoom>Previous
Command	
Alias	
Dialog Box	

Command Overview

The **Zoom Previous** command displays the previous view.

General Procedure

1 Click the **Zoom Previous** icon on the Standard Toolbar.

TIP:

- **Zoom Previous** can be accessed from the **Zoom** command by typing **P** and pressing <↵>.

Zoom Options

Command Access

Toolbar Menu	Zoom
Pull-Down Menu	View>Zoom>Options
Command	Zoom
Alias	Z
Dialog Box	

Command Overview

Other **Zoom** options are available within the **Zoom** command. These can be accessed from the fly-out button on the View pull-down menu. These options are also available by typing the capitalized letter of the desired option after invoking the **Zoom** command.

General Procedure

1. Click the **Zoom** command options from the View pull-down menu.
2. If typing **Z**, press <↵>, then type the capitalized letter of the desired option and press <↵>.

TIP:

- The most important **Zoom** options are **Window**, **Bounds** and **Fit**.
- **Zoom Bounds** or **Fit** occasionally to be sure bits of the drawing have not gotten thrown out into space.

Command Exercise - Dynamic Zoom and Pan

Estimated time to completion: 10 minutes;

Drawing Name: `pan1.dwg`

Scope:

Zoom and **Pan** the drawing dynamically. Use the **RMB** to switch between some basic zoom modes.

Follow these steps for this exercise:

1. Click the **Dynamic Zoom** icon on the Standard Toolbar.
2. Pick a point in the middle of the drawing window. Hold the **LMB** down and drag the mouse up and down. Notice how you zoom in as you move the mouse up, and zoom out as you move the mouse down.
3. Hold the **LMB** down and drag the cursor to the top of the screen. Let go of the **LMB** and move the cursor to the middle of the screen. Hold the **LMB** down and drag the mouse to the top of the screen. This allows you to continue zooming in. Repeat the process but zoom out by dragging the mouse down instead.
4. Press the <↵> or **Esc** key to end the command.
5. Click the **Dynamic Pan** icon on the Standard Toolbar.
6. Select a location in the middle of the screen and hold down the **LMB** and drag your mouse up, down, right and left. Notice how the drawing pans as you move the mouse. Let go of the **LMB** and reposition the mouse and repeat the steps above to continue panning in one direction.
7. Press the **RMB** and select **Zoom** from the Shortcut menu. Zoom in and out by holding the **LMB** down and dragging the mouse up and down.
8. Press the **RMB** and switch back to **Pan**. Pan through the drawing.
9. Press the **RMB** and switch to **Zoom Window** from the Shortcut menu. You will create a window with your mouse that will represent the area to zoom in on. Position your mouse to create a rectangular window. Hold your **LMB** down and drag the mouse diagonally to create a window. Release the **LMB** to finish the command and zoom in on the drawing. Notice that this method is a drag and release, and works differently fromthen the regular **Zoom Window** command.

TIP:

- The Microsoft® IntelliMouse offers many user-friendly viewing options that are automatically invoked by using the wheel on the IntelliMouse.
- It is recommendedthat you use a Microsoft IntelliMouse when using DraftSight.

Rebuild

Command Access

Toolbar Menu	
Pull-Down Menu	View>Rebuild
Command	Rebuild
Alias	RE
Dialog Box	

Command Overview

The **Rebuild** command is used to smooth out circles or arcs in the drawing. **Rebuild All** is used when there are multiple viewports in the drawing. **Refresh** recalculates the mathematics of the drawing and although it takes longer, it is a more thorough command.

General Procedure

1 Select **Rebuild** from the View pull-down menu.

TIP:

- Sometimes **Rebuild** will happen automatically, as with certain **Zoom** commands.
- **Rebuild** can be use frequently. It recalculates the mathematics of the drawing and displays the objects with greater accuracy.

Command Exercise - Zoom and Rebuild

Estimated time to completions: 10 minutes

Drawing Name: `zoom1.dwg`

Scope:

Zoom this drawing out several times, then use the **Zoom Window** option and pick just inside the corners of the red rectangle. **Rebuild** to see the arcs and circles smooth out.

Follow these steps for this exercise:

1. Click the **Dynamic Zoom** icon on the Standard toolbar.
2. Press the **LMB** in the middle of the drawing and drag down to zoom out the drawing.
3. Press <↵> to end the command.
4. Click **View**>**Rebuild** from the pull-down menu.
5. Click **View**>**Zoom**>**Window** from the Pull-down menu.
6. Create a window with your mouse that will represent the area to be zoomed in on. Position your cursor inside a corner of the red box and click (**LMB**). Move the mouse diagonally to another corner of the box and click (**LMB**) again. Notice how the arcs and circles are represented by small straight segments.
7. Click **View**>**Rebuild** from the pull-down menu.

NOTE:

- From the **View**>**Zoom** pull-down menu, experiment with the different **Zoom** options available. Which method of viewing your drawing is the easiest?

TIP:

- You can invoke the **Zoom Window** command directly by typing **Z**<↵> and specifying the opposite corners of the zoom window (the **Window** option is the default). You can also access the command from the **View**>**Zoom**>**Window** Pull-down menu.

Named Views

Command Access

Toolbar Menu	
Pull-Down Menu	View>Named Views...
Command	Views
Alias	V
Dialog Box	Views

Command Overview

Views can be saved and restored with the **Named Views** command. This will save the time it takes to zoom out and in to a frequently selected view. This tutorial will focus on the **New** option of the **Views** dialog box. New views can be named as the current view display or defined by a new view (specify later). Named views from the list can be selected and set as the current view.

General Procedure

1 Click **View**>**Named Views** from the pull-down menu.
2 Click **New**.
3 In the View dialog box:
In **Name**: Type a `View Name`.

In **Class**: Type a `New Class Name` or select a class. Or, you can leave Class set to `<None>`.

Under **Boundaries**: set options:

- **As displayed**: Uses the boundaries of the current display.
- **Specify later**: Allows you to define a windowed area of the current view. Click **Specify later** and define a rectangular area in the graphics area, then press ↵.

4 Click **OK** twice.
5 Named Views can now be selected from the list and **Set as current**.
6 To delete a named view, select it, then click **Delete**.

TIP:

- Named views are saved with the drawing file.
- Certain characters are not allowed for the view name.
- Remember to select **As displayed** or **Specify later** for the new named view.

Command Exercise - Named View

Estimated time to completion: 5 minutes

Drawing Name: `nview1.dwg`

Scope:

Zoom the specified area. With the **Named Views** command, name the view `VIEW 1` and save it. **Zoom Fit**, and then restore the named view.

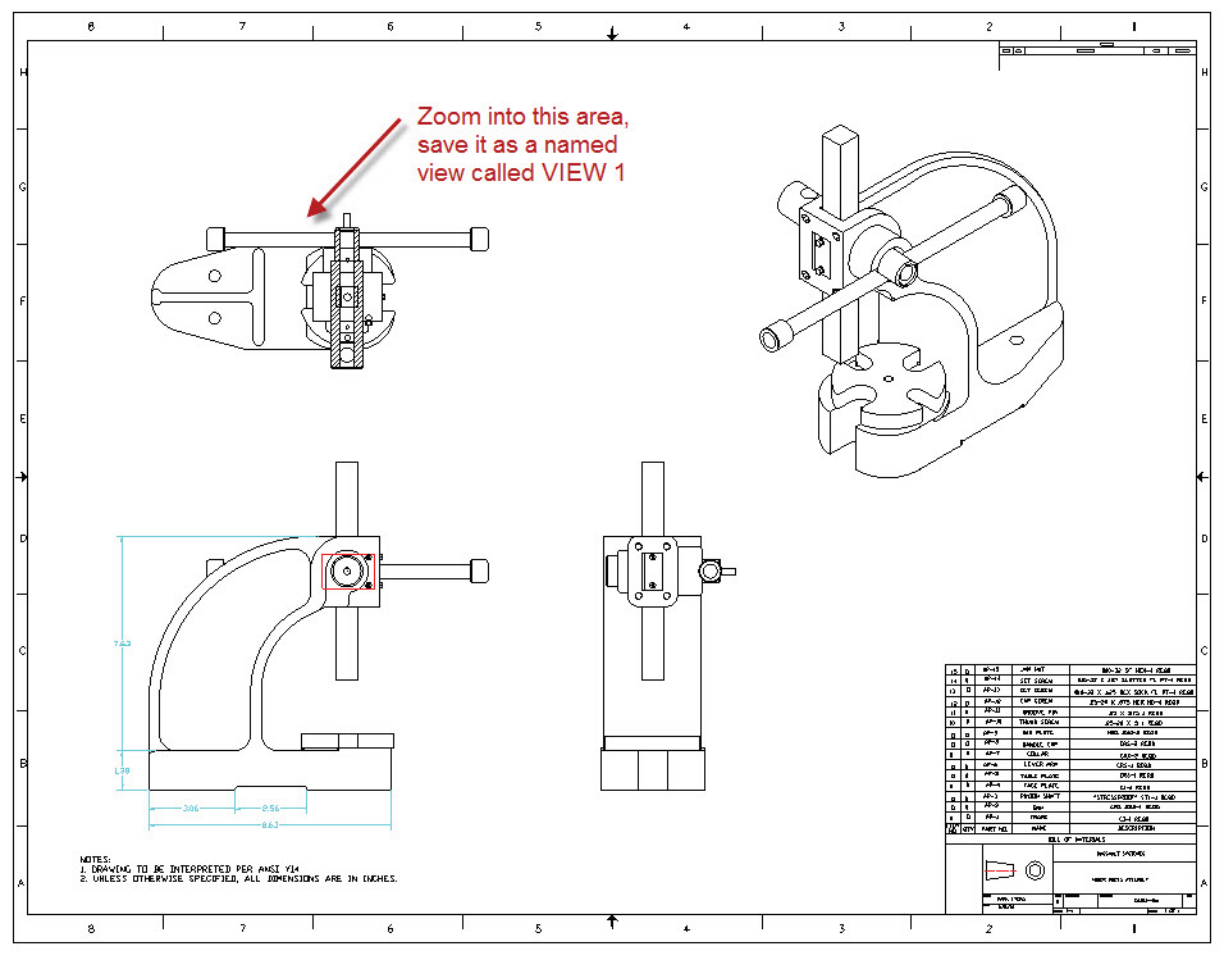

Multiple ViewTiles

Command Access

Toolbar Menu	View Tiles>ViewTiles
Pull-Down Menu	View>View Tiles>Options
Command	ViewTiles
Alias	VPORTS
Dialog Box	View Tiles

Command Overview

The Model View of the drawing can be divided into Multiple **ViewTiles**. Each ViewTile can display a different part of the drawing, however, only one ViewTile may be active. ViewTile configurations, including the views within ViewTile, can be selected to be current later in the drawing.

General Procedure

To create one, two or three ViewTiles:

1. Click **View**>**View Tiles** from the pull-down menu and select the desired number of viewports (select 1, 2, 3 or 4).
2. Follow the `command line` prompts. For 3 viewports, Right is the default location for the largest viewport.

To create ViewTiles using the View Tiles dialog box:

1. Click **View**>**View Tiles**>**View Tiles Manager** from the pull-down menu.
2. Select **Type**: **New**.
3. Select the desired **ViewTile** configuration from the list.
4. Click **OK**.

To use Multiple ViewTiles:

1. Click in a **ViewTile** to make it active.
2. Begin constructing geometry in the ViewTile.
3. To draw between ViewTiles, click on one ViewTile and pick a point, then click in another ViewTile to continue to draw the entity.

To save a ViewTile configuration:

1 Click **View**>**View Tiles**>**View Tile** M**anager** from the Pull-down menu.
2 Select **Type**: **New**.
3 Input the ViewTile `Name` in the save box.
4 Click the **Save** button.
5 This name will appear in the list when the **Named View** button is selected.

TIP:

- An active **ViewTile** is the one with the dark border around it. The cursor crosshairs will also be visible in the active ViewTile.
- Named **ViewTile** configurations will be saved with the drawing.

Command Exercise - Multiple ViewTiles

Estimated time to completion: 10 minutes

Drawing Name: `vtile1.dwg`

Scope:

Create four **ViewTiles**. Restore a named view in each ViewTile. **Save** the ViewTile configuration as `V1`. **Join** two adjacent views and save this as `V2`. **Change** to a single ViewTile. **Restore** a saved ViewTile configuration.

Follow these steps for this exercise:

1. Click **View**>**View Tile**>**4 Tiles** from the pull-down menu.
2. Notice how the drawing window is divided into fourViewPorts. The same view is displayed in all four ViewPorts. We will now restore different **Named Views** in each ViewPort.
3. Move your cursor to the upper left ViewPort and activate it by clicking inside it (**LMB**).
4. Click **View**>**Named Views** from the pull-down menu.
5. In the Views dialog box, double-click on **Block** to set it current for the ViewPort.
6. Click **OK**.
7. Repeat the process for the other ViewPorts by selecting other named views for each.
8. Once you have created the layout, save the configuration.
9. Select **View**>**View Tiles**>**View Tile** M**anager** from the pull-down menu.
10. Click on **New**, and input `V1` into the S**ave** box.
11. Click S**ave**.
12. **Join** the two ViewPorts on the right side of the drawing window.
13. Select **View**>**View Tiles**>**Join** from the pull-down menu.
14. Click the **Dominant Tiled View** and press <↵>.
15. Click the ViewTile to **Join** and press <↵>.
16. **Save** this layout as `V2`.
17. **Switch** to a single ViewTile by selecting **View**>**View Tiles**>**Single View Tile** from the pull-down menu.

TIP:

- Use your **RMB** to activate a pop-up dialog box that will allow you to delete or rename your **ViewTile** configurations in the View Tiles dialog box.

Section 8 Exercise - Viewing Drawings

Estimated time to completion: 15 minutes

Drawing Name: `section 8 mcad.dwg`

Scope:

Use the commands you have learned in this section to view the drawing. Determine which viewing commands are easier for you to use. Locate information on the drawing and fill out the table below. Follow the instructions on the drawing for creating a named view and ViewTile layout.

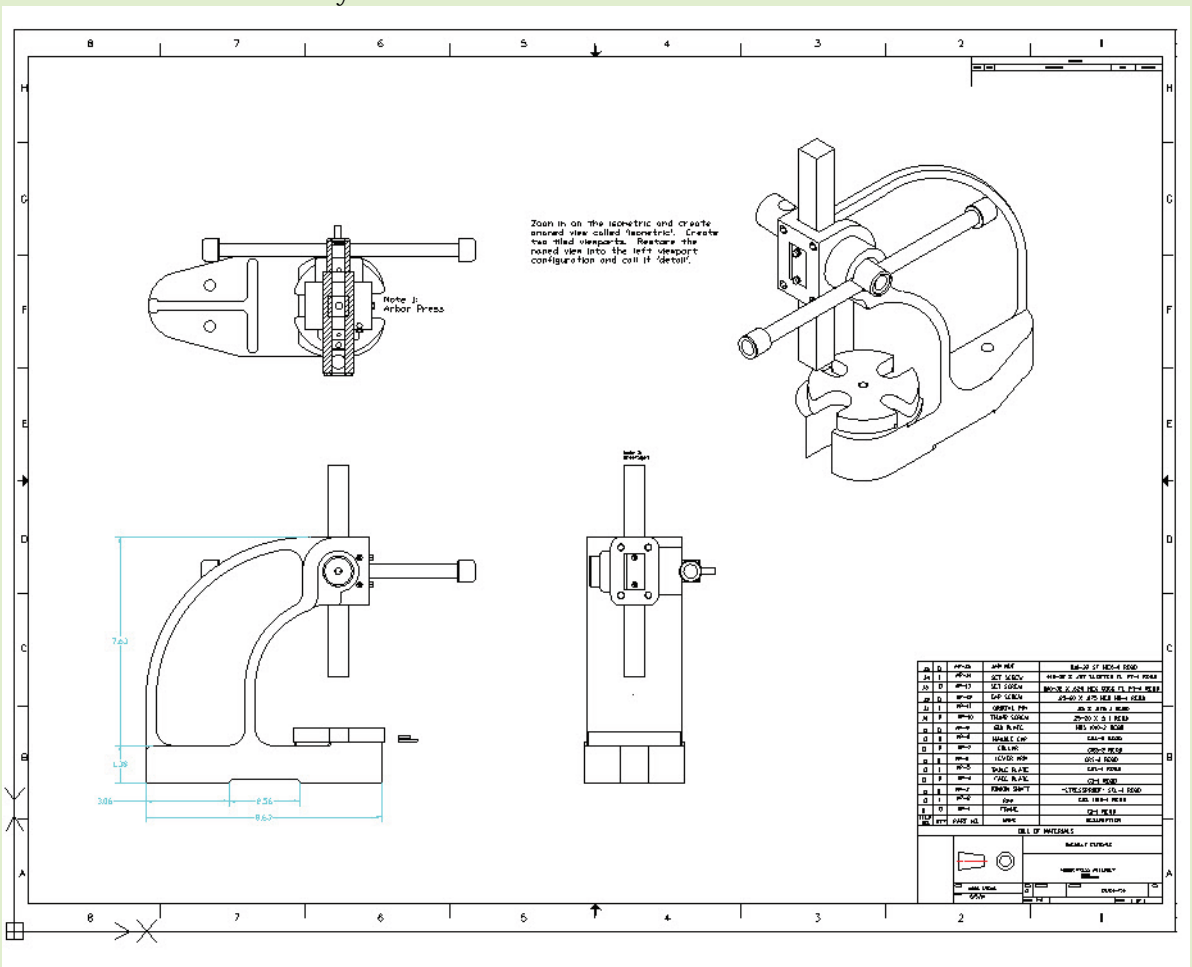

Note 1:

Note 2:

Note 3:

Note 4:

Note 5:

Note 6:

Note 7:

TIP:

- Choose a **Zoom** command you feel comfortable with. **Zoom Window** and **Zoom Previous** are very common commands.

Section 8 Exercise - View Commands

Estimated time to completion: 15 minutes

Drawing Name: `section 8 aec.dwg`.

Scope:

Using the commands learned in this section, **Zoom** and **Pan** around the drawing. Examine the named views in the drawing and create **Named Views** for the `Herb Garden`, `Overflowing Pot Water Feature` and the `Lawn`. View the drawing with multiple ViewTiles.

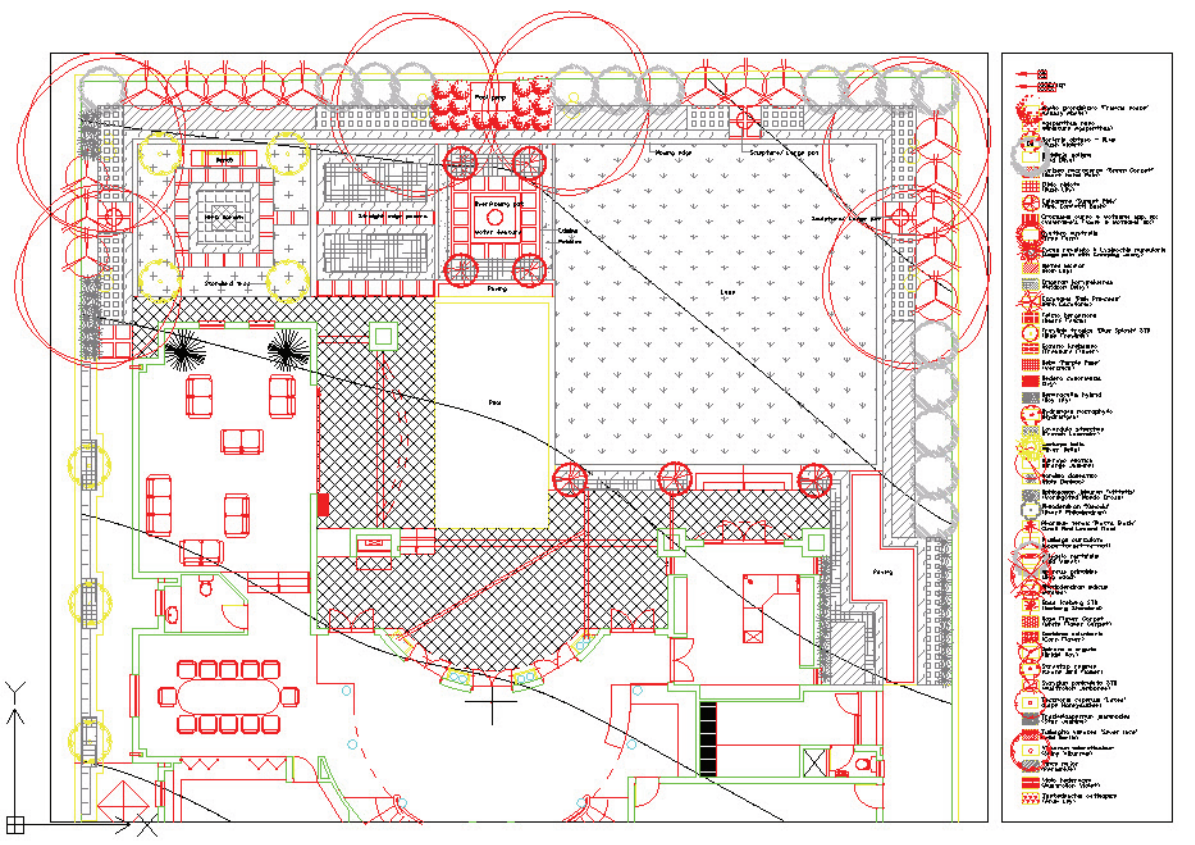

TIP:

- Use different **Zoom** options to become familiar with all of them.
- **Zoom** in on the `Herb Garden` and create a named view of it. Do the same for the `Overflowing Pot Water Feature` and the `Lawn`.
- Use the **ViewTiles** command to bring up multiple ViewTiles and show a different room in each ViewTile.

Section 8 Review Questions

1 Identify the following icons by writing the command and the toolbars where they can be found.

	Icon	Command	Toolbar
a.			
b.			
c.			
d.			
e.			
f.			

2 What is the difference between **Zoom Fit** and **Zoom Bounds**?

3 What is the difference between **Rebuild** and **Refresh**?

4 How do you make a **ViewTile** active? How can you tell that a **ViewTile** is active?

5 How many **ViewTiles** can be active at the same time?

___ 1

___ 2

___ 3

___ As many as the user decides

6 When restoring **ViewTile** configuration, does DraftSight **Refresh** the drawing? Try it.

Section 9
Text and Dimensions

Estimated Class Time: 3 hours

Objectives

This section will cover how to use Text and Dimensions. Learn to type Text in either single or multiple lines, edit Text and check your spelling errors. Create text Styles choosing from a variety of fonts. Dimensioning a drawing is easy. If placed correctly, the dimensions will be as accurate as the drawing. Learn to create Dimension Styles to suit the drawing specifications. Dimension in either English, metric or both. Edit selected dimensions or make changes to the Dimension Style for global update.

- **Simple Note**
  Type a single line of text for Simple Notes.
- **Note**
  Use the multiline text editor to create paragraphs of text or sentences that can be stretched into wider or narrower paragraphs using Grips.
- **Text Style**
  Create several Text Styles for specific text requirements.
- **Edit Text**
  Use the Edit Text command to change the content of Simple Note or Notes. Use the Properties command to change other features of the text in the drawing.
- **Find and Replace**
  Use the Find and Replace to search and change text in the drawing.
- **Spell Check**
  Use the Spell command to check for spelling errors.
- **Dimensions**
  Place dimensions using a variety of Dimension standards.
- **Dimension Style**
  Create Dimension Styles based on DraftSight's standard style.
- **Edit Dimension Location**
  Use EGrips to edit the placement of dimensions.
- **Edit Dimension Properties**
  Edit dimensions globally with the dimension style or individually with the properties command.

Simple Note

Command Access

Toolbar Menu	Draw / SimpleNote
Pull-Down Menu	Draw>Text>SimpleNote
Command	SimpleNote
Alias	SNOTE
Dialog Box	

Command Overview

With the **SimpleNote** command, you can create Text lines of any position, justification, orientation, height and TextStyle using the Text dialog box.

General Procedure

1. Click the **SimpleNote** icon on the Draw toolbar.
2. In the **Text** dialog box, type the lines of text you want to add to your drawing.
3. Under **Insertion point**, type coordinate values for X, Y and Z, or click **Select in graphics area** to specify the location after closing the dialog box.
4. Under **Insertion orientation**, set the position and alignment of the text lines in relation to the insertion point.
5. Under **Options**, set these:
   - **Font**
   - **Angle of insertion**
   - **Height** (text size)
6. Click **OK**.

TIP:

- Remember to use the <↵> key on the keyboard.

Command Exercise - Simple Note

Estimated time to completion: 5 minutes

Drawing Name: `text1.dwg`

Scope:

Create two lines of text as indicated using the **SimpleNote** command.

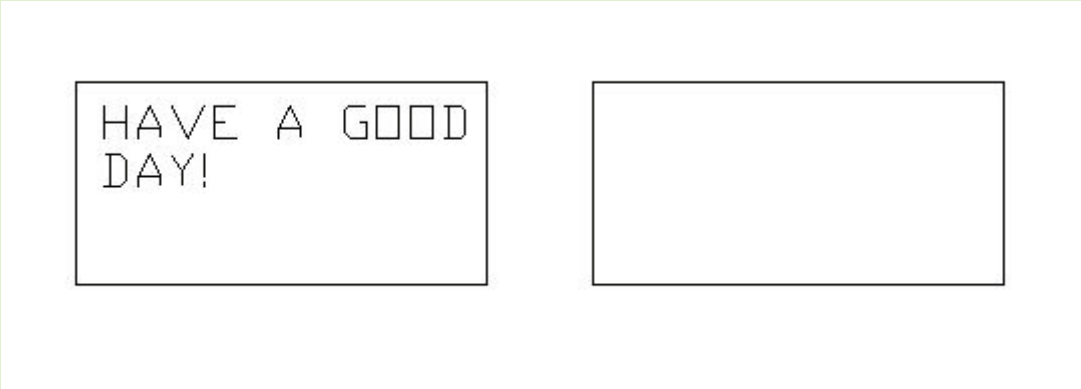

Command Exercise – Simple Note

Estimated time to completion: 5 minutes

Drawing Name: `text2.dwg`

Scope:

Recreate the **SimpleNote** Text. Use different methods of justifying the text.

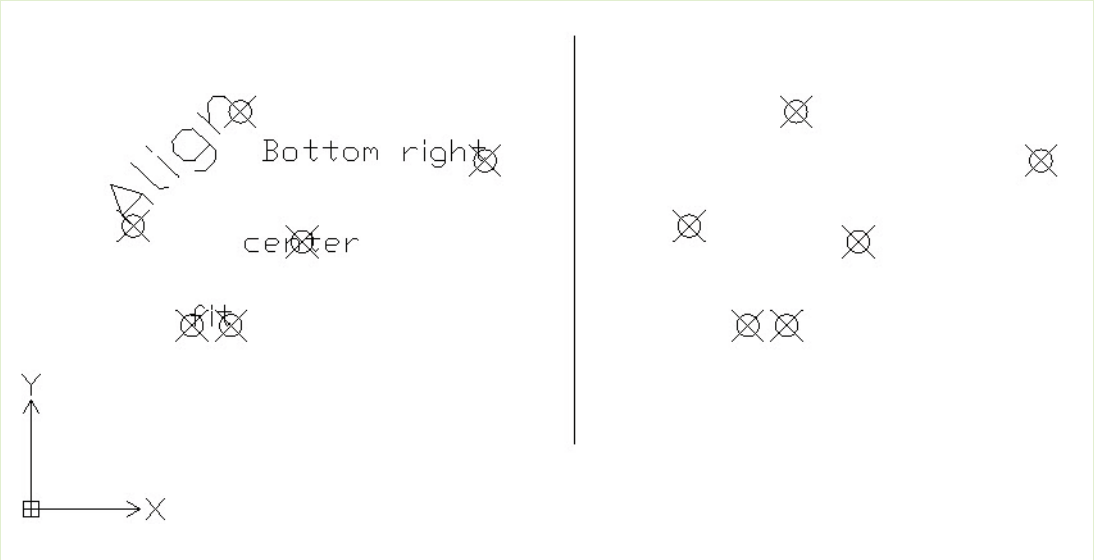

Note

Command Access

Toolbar Menu	Draw / Note
Pull-Down Menu	Draw>Text>Note
Command	Note
Alias	N
Dialog Box	

Command Overview

Create paragraphs of text with the **Note** command. Define the area where the note should appear in the drawing, by picking opposite corners of the text box in the graphics window. Type your note in the **Edit Note** dialog box. Note text can be moved, rotated, scaled, copied or changed after it has been placed in the drawing. Use the EGrips to adjust the paragraph width and height. When you type in the text editor, the spacebar will create a space, and the <↵> key will act as a carriage return and bring the cursor to the next line. The cursor may be placed between letters by clicking once (**LMB**). A double click will select the entire word and a triple click will select the entire paragraph. The <↵> button on the mouse (**RMB**), when placed within the text editor dialog box, will invoke a shortcut menu with options to cut, copy and paste selected text. To resize the text editor, select a corner of the window with the **LMB** and drag. Begin the **Note** command, specify the first corner, then the opposite corner of the window. Type the text in the text editor, use the available options, then select **OK** to place the text in the drawing. The **EditText** command will open the same dialog box with the selected text for editing.

General Procedure

1. Click the **Note** icon on the Draw toolbar.
2. Specify the text area by picking the first corner, then the opposite corner in the graphics window.
3. Type the text in the text editor dialog box.
4. Click **OK** to exit.

TIP:

- In the **Note** text editor, single click (**LMB**) to insert words or letters. Double-click to highlight the entire word. Triple-click to highlight the entire paragraph.
- Pressing the <↵> button on the mouse (**RMB**), with the cursor in the text box, will bring up the cursor menu with windows edit options.
- Type text using the spacebar (and not <↵>) to allow sentences to wrap.
- After exiting the **Note** text dialog box, use EGrips to adjust the width and height of the note.
- Documents to be imported into the test editor should be saved in text (.txt) or Rich Text Format (.rtf).

Command Exercise - Note

Estimated time to completion: 5 minutes

Drawing Name: `notetext1.dwg`

Scope:

Use the **Note** command to create the text as indicated.

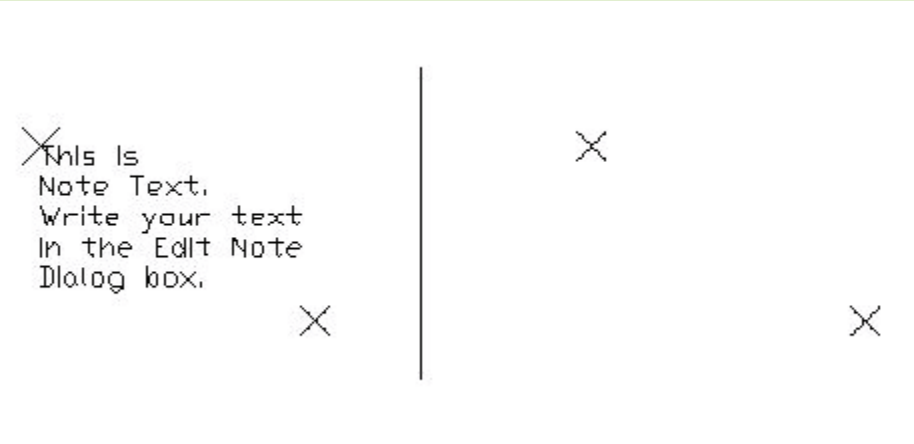

Command Exercise - Note

Estimated time to completion: 5 minutes

Drawing Name: notetext2.dwg

Scope:

Use the **Note** command to create the text as indicated.

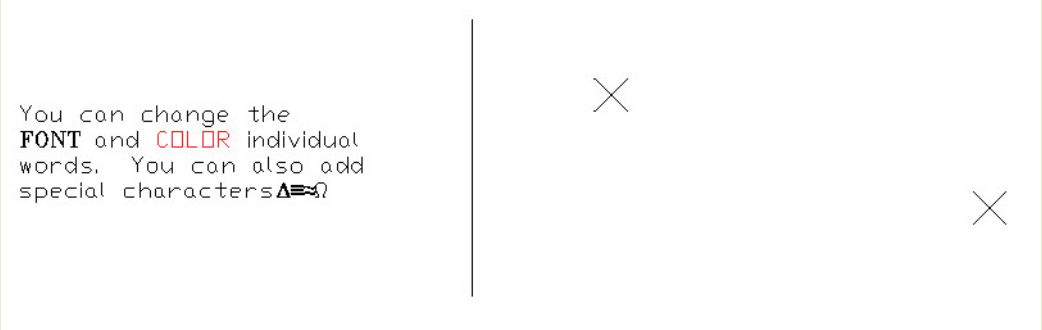

Text Style

Command Access

Toolbar Menu	Text / Text Style
Pull-Down Menu	Format>Text Style
Command	TextStyle
Alias	STYLE
Dialog Box	Options>Drafting Styles>Text

Command Overview

In addition to the Standard Text Style, other styles can be created. Text will be typed in the current text style, and may be changed from one style to another. Applying a different font to a text style will globally change the font of any text in the drawing that has been typed in that style. DraftSight supports most Windows fonts, including True-Type fonts. Text Styles may be deleted or cleaned only if there is no text in the drawing referencing that style, or it is not the current style.

General Procedure

Making changes to the Standard Text Style:

1. Click **Format**>**Text Style...** from the pull-down menu.
2. Select a different **Font** from the drop-down list.
3. Select **Apply**, and then **Close** the dialog box.

TIP:

- Use this dialog box to make a Text Style current.
- Changes applied to a Text Style will globally affect any text in the drawing referencing that style.
- Avoid having an excessive number of Text Styles. Some common text styles might be made for notes, dimensions and the title block.
- Refer to the following text height chart for large-format drawings. For instance, if the drawing area is 12 x 9, a text height of .2 might be good. However, if the drawing area is 120 x 90, a text height of 2 would be more appropriate.

Text Height Chart
This chart is for drawings using Architectural or Fractional Units. The text sizes are based on what would typically be the plotted scale.

Drawing Scale	Scale Factor	Plotted Scale	Text Size in Drawing
1/16 inch = 1 foot	192	1/16 inch	12 inch
		3/32 inch	18 inch
		1/8 inch	24 inch
		3/16 inch	36 inch
		1/4 inch	48 inch
1/8 inch = 1 foot	96	1/16 inch	6 inch
		3/32 inch	9 inch
		1/8 inch	12 inch
		3/16 inch	18 inch
		1/4 inch	24 inch
3/16 inch = 1 foot	64	1/16 inch	4 inch
		3/32 inch	6 inch
		1/8 inch	8 inch
		3/16 inch	12 inch
		1/4 inch	16 inch
1/4 inch = 1 foot	48	1/16 inch	3 inch
		3/32 inch	4.5 inch
		1/8 inch	6 inch
		3/16 inch	9 inch
		1/4 inch	12 inch
3/8 inch = 1 foot	32	1/16 inch	2 inch
		3/32 inch	3 inch

Drawing Scale	Scale Factor	Plotted Scale	Text Size in Drawing
3/8 inch = 1 foot		1/8 inch	4 inch
		3/16 inch	6 inch
		1/4 inch	8 inch
1/2 inch = 1 foot	24	1/16 inch	1.5 inch
		3/32 inch	2.25 inch
		1/8 inch	3 inch
		3/16 inch	4.5 inch
		1/4 inch	6 inch
3/4 inch = 1 foot	16	1/16 inch	1 inch
		3/32 inch	1.5 inch
		1/8 inch	2 inch
		3/16 inch	3 inch
		1/4 inch	4 inch
1 inch = 1 foot	12	1/16 inch	0.75 inch
		3/32 inch	1.125 inch
		1/8 inch	1.5 inch
		3/16 inch	2.25 inch
		1/4 inch	3 inch
1.5 inch = 1 foot	192	1/16 inch	0.5 inch
		3/32 inch	0.75 inch
		1/8 inch	1 inch
		3/16 inch	1.5 inch
		1/4 inch	2 inch
1 inch = 20 feet	240	1/16 inch	15 inch
		3/32 inch	22.5 inch

Drawing Scale	Scale Factor	Plotted Scale	Text Size in Drawing
1 inch = 20 feet		1/8 inch	20 inch
		3/16 inch	45 inch
		1/4 inch	60 inch
1 inch = 30 feet	240	1/16 inch	22.5 inch
		3/32 inch	33.75 inch
		1/8 inch	45 inch
		3/16 inch	67.5 inch
		1/4 inch	90 inch
1 inch = 40 feet	480	1/16 inch	30 inch
		3/32 inch	45 inch
		1/8 inch	60 inch
		3/16 inch	90 inch
		1/4 inch	120 inch
1 inch = 50 feet	600	1/16 inch	37.5 inch
		3/32 inch	56.25 inch
		1/8 inch	75 inch
		3/16 inch	112.5 inch
		1/4 inch	150 inch
1 inch = 60 feet	720	1/16 inch	45 inch
		3/32 inch	67.5 inch
		1/8 inch	90 inch
		3/16 inch	135 inch
		1/4 inch	180 inch

Command Exercise - Text Styles

Estimated time to completion: 5 minutes

Drawing Name: `None` (start from scratch)

Scope:

Create a **TextStyle** called `TEXT1` and apply a text height of **0.4** and the font called `Arial` to that Style. Type the text as indicated in the new style.

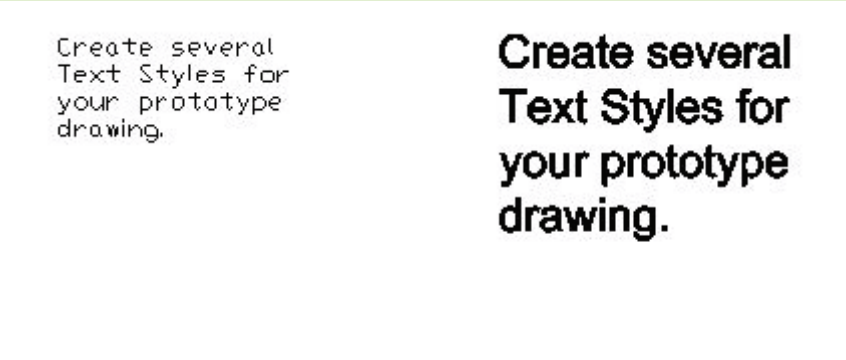

Command Exercise - Text Styles

Estimated time to completion: 5 minutes

Drawing Name: `style1.dwg`

Scope:

Use the **Clean** command to delete the text style `TEXT 1`, or delete it from the dialog box.

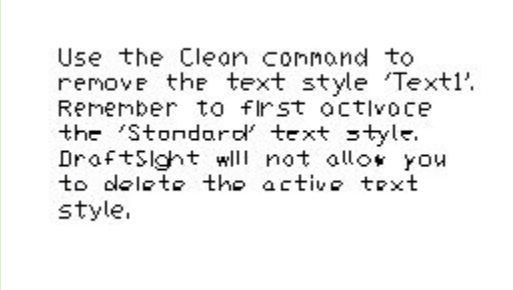

Edit Annotation

Command Access

Toolbar Menu	
Pull-Down Menu	Modify>Entity>Annotation
Command	EditAnnotation
Alias	EDITTEXT
Dialog Box	Edit Note

Command Overview

Use the **EditAnnotation** command to change the contents of the text in the drawing. For **SimpleNote**, this will display the **Edit SimpleNote** dialog box. Text may also be edited using the **Properties** command. This contains additional options to change text properties.

General Procedure

1. Click **Modify**>**Entity**>**Annotation** from the pull-down menu.
2. Select the text to edit.
3. Make corrections to the text by typing over the highlighted text, or place the cursor between letters or words and type.
4. Select **OK** to exit.

TIP:

- The **EditAnnotation** command works with Dimension, Note and Simple Note text.

Command Exercise - Edit Text

Estimated time to completion: 5 minutes

Drawing Name: `etext1.dwg`

Scope:

Edit the **SimpleNote** and the **Note** text using the **EditAnnotation** command. Edit the text on the right to be like the text on the left.

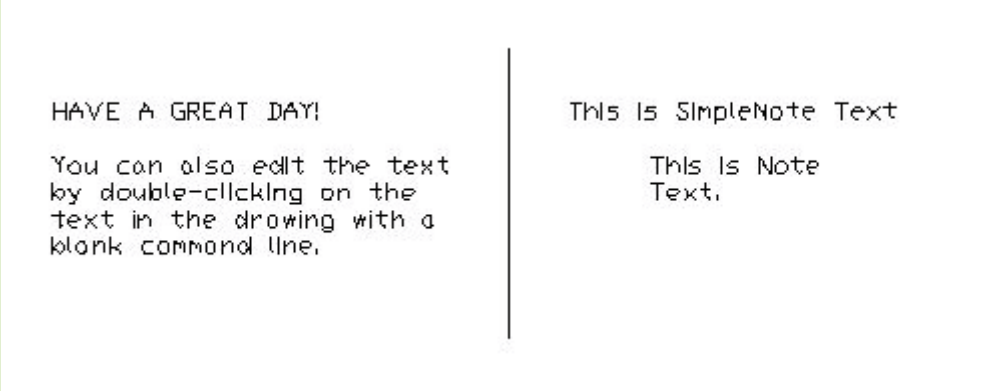

Command Exercise - Edit Text

Estimated time to completion: 5 minutes

Drawing Name: etext2.dwg

Scope:

Edit the **SimpleNote** and the **Note** text using the **Properties** command.

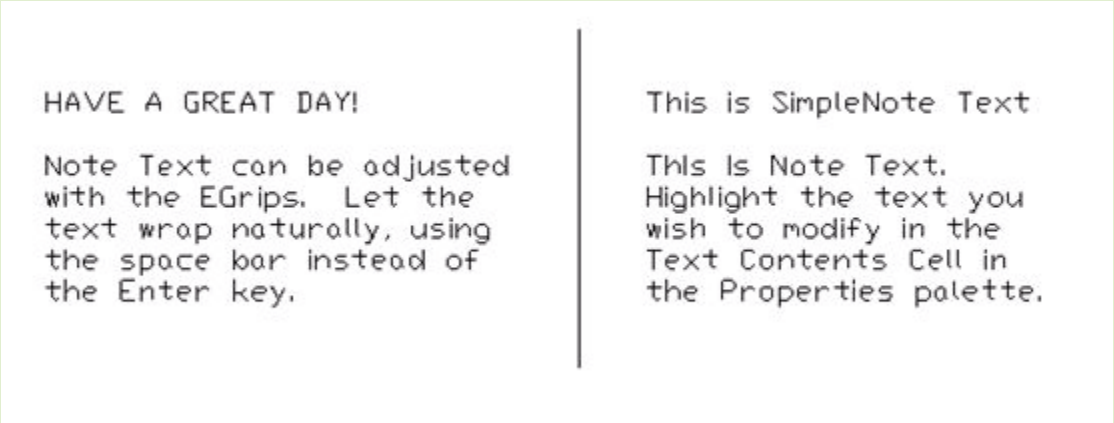

Command Exercise - Edit Text

Estimated time to completion: 5 minutes

Drawing Name: `etext3.dwg`

Scope:

Using **EGrips**, move and stretch the note text into the box.

Command Exercise - Edit Text

Estimated time to completion: 5 minutes

Drawing Name: `etext4.dwg`

Scope:

Using the **Properties** command, change the Style of the text to `TEXT2`.

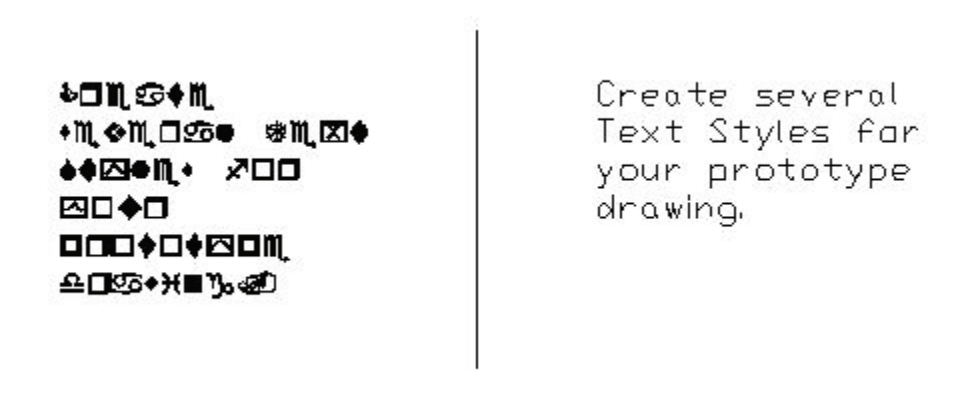

Find and Replace

Command Access

Toolbar Menu	
Pull-Down Menu	
Command	Find
Alias	
Dialog Box	Find and Replace

Command Overview

The **Find** and **Replace** command provides text search with the options to perform a global search or to search selected text. Type the text string to find, and type the replacement text.

General Procedure

To find and replace text:

1. Type **Find** at the command prompt.
   The Find and Replace dialog box opens.
2. In **Find what**, type the **Text** to find.
3. In **Search in**, specify where to find the **Text**. You can browse these locations:
   - On the Active Sheet/Area
   - In the Entire drawing
   - In a specified Selection set (click Select in graphics area to specify the entities to form a selection set)
4. In **Replace with**, type the **Text** to replace the search string. Leave **Replace with** empty if you want to find **Text** but not replace it.
5. Click **Options** to specify the entity types to include in the search and set search options.
   The Find and Replace Options dialog box opens.
6. In **Search for text in,** select or clear BlockAttribute values, Dimensions, Notes and SimpleNotes, Hyperlink addresses, Hyperlink text and Tables.
7. Specify whether to **Match case** and **Find whole words** only.
8. In Search Results:
   - Click **Find**, then **Find next**, to search for the specified text. In the context area a text block or text line displays the corresponding content of the found text.
   - Click **Replace** to replace all appearances of the found text.
   - Click **Replace All** to replace all found text locations .
   - Click **Zoom** to zoom to the current text location in the graphics area.
9. Click **Close**.

Spell Check

Command Access

Toolbar Menu	
Pull-Down Menu	
Command	SpellCheck
Alias	SPELL
Dialog Box	Spell Check

Command Overview

Check for spelling errors. Select one line of text or all of the text in the drawing. Add words to the custom dictionary.

General Procedure

1. Type **SpellCheck** at the command prompt.
2. In the graphics area, select the text entities to check and press **Enter**.
3. The **Spell Check** dialog box appears if the software finds a spelling mistake:
   - Under **Current word**, the dialog box displays the word in doubt.
   - Under **Context**, the dialog box displays the text line or portion of the text line.
   - Under **Suggestions**, corrections are proposed.
4. Possible actions:
   - **Ignore** the suggestion for the current appearance of the word in doubt.
   - **Ignore All** the suggestions for all appearances of the word in doubt.
   - **Change** the current word to the word you select in Suggestions.
   - **Change All** appearances of the misspelled words to the word you select in Suggestions.
   - **Add** the word in doubt to the dictionary.
   - **Look Up** a word to find synonyms.
   - **Change Dictionary** to specify another language for spell checking.
5. Click **Close**.

TIP:

- Building a custom dictionary is useful when abbreviations are used frequently in the drawing.

Command Exercise - Spell Check

Estimated time to completion: 5 minutes

Drawing Name: `spell1.dwg`

Scope:

Correct the spelling in the text provided.

Sometimes when you tpe tao fosst, you mke lttle mistaks. Spel Check Is realy helpful.

Dimensions

Command Access

Toolbar Menu	
Pull-Down Menu	Dimension>Option
Command	
Alias	
Dialog Box	

Command Overview

Learn how to Dimension a drawing using the dimension variables. Dimensions will be as accurate as the drawing, provided the entities are chosen properly. To open the Dimension Toolbar, place the cursor icon over any icon that is in the graphics window and click the right mouse button (**RMB**). Select **Toolbars...** from the pop-up menu. Place a checkmark before **Dimension**, and click **OK**. This section will cover individual dimension commands, how to select the entity to dimension and pick the dimension location. The easiest way to adjust the dimension locations after they have been picked is to use the EGrips. Some Dimension commands, such as Ordinate Dimensions and Tolerance, will not be covered in this tutorial. Dimension Style and Edit Dimension commands and options will be covered in the next section.

Dimension Command	Icon	Overview
Linear Dimension		This option is for horizontal or vertical dimensions. Use EntitySnaps to select the first and second extension line origin or press <enter> to select the entity. Drag the cursor and pick to place the dimension.
Aligned Dimension		This option will align a dimension with an angled line. Use EntitySnaps to select the first and second extension line origin or press <Enter> to select the entity. Drag the cursor and pick to place the dimension.
Baseline Dimension		This option builds a baseline dimension from the first extension line of a linear, aligned or angular dimension. Begin with the linear, aligned or angular dimension first, using EntitySnaps to select the origin points. Next invoke the Baseline Dimension command and select the next extension line origin. Continue, then press <Enter> to exit the command.

Dimension Command	Icon	Overview
Continue Dimension		This option creates continuous dimensions from the second extension line of a linear, aligned or angular dimension. Begin with the linear, aligned or angular dimension first, using EntitySnaps to select the origin points. Next invoke the Continue Dimension command and select the next extension line origin. Continue, then press <Enter> to exit the command.
Ordinate Dimension		The OrdinateDimension command creates ordinate point dimensions. The command displays an X or Y coordinate with a leader line to create X-datum or Y-datum dimensioning. The value of the X or Y coordinate is defined by the point you specify, called the feature location.
Center Mark		Select a circle or arc to place a center mark in the drawing. Center Mark styles can be modified in the Dimension Styles dialog box.
Diameter Dimension		Select a circle or arc for the diameter dimension. Drag the cursor and pick to place the dimension.
Radius Dimension		Select a circle or arc for the radius dimension. Drag the cursor and pick to place the dimension.
Angular Dimension		This option will place an angular dimension between two selected lines. Select two angular lines and pick to place the dimension.
Arc Length Dimension		The ArcLengthDimension command creates an arc length dimension. It measures the distance along an arc or arc segment of a polyline. To differentiate arc length dimensions from linear or angular dimensions, an arc symbol is displayed with the dimension text. The arc symbol is displayed before or above the dimension text depending on the current dimension style.
Jogged		The JoggedDimension command creates jogged radius dimensions for circles and arcs. Jogged dimension lines are typically used when a sheet is too small to display the true center point of radial dimensions. The command lets you specify another origin point for the dimension line. This point is called the center position override. The command measures the radius of the specified circle or arc and displays the dimension text with a preceding radius symbol.

Dimension Command	Icon	Overview
Leader		Use the Leader command to draw leader lines that connect annotations to a drawing entity. Leaders are useful when the dimension text or annotation does not fit next to the corresponding entity. You can optionally place single or multiple lines of text, a geometric tolerance, a block reference or a copy of another leader at the end point of the leader line. Draw leaders as straight line segments or spline curves. By default, the start point of a leader is an arrowhead you can customize.
Tolerance		Use the Tolerance command to create and place datum indicators and basic dimension notations in the drawing.
Dimension Edit		Use the EditDimension command to change the position, angle and value of dimension text. You can also change the orientation of the extension lines of dimensions.
Dimension Text Edit		Use the EditDimensionText command to move or rotate dimension text for a single dimension. Use the **EditDimension** command to edit multiple dimensions.
Dimension Rebuild		Use the RebuildDimension command to apply the active dimension style to specified dimensions. Note that the active DimensionStyle permanently overrides the DimensionStyle previously applied to the specified dimensions.
Dimension Style		Use the DimensionStyle command to create and modify DimensionStyles. DimensionStyles control the way dimensions look.

General Procedure

For Linear Dimensions:

1. Select the **Linear Dimension** icon on the Dimension toolbar
2. Use appropriate ESnaps to select the dimension's extension line origin points. Drag the cursor and pick the location for the dimension. Note: To dimension a single line segment, press <↵>, and then select the line.

For Radius, Diameter or Center Mark commands:

1. Click the desired command.
2. Pick the circle or arc to dimension (on its circumference). Drag the cursor and pick the dimension location. Note: Using **Center Mark** will simply place a center mark at the center of the arc.

For Baseline or Continue Dimension:

1 Begin by placing a **Linear**, **Aligned** or **Angular** D**imension**, using ESnap to select the origin points.

2 Click the **Baseline** or **Continue Dimension** icon on the Dimension toolbar. Using **ESnaps**, pick the next dimension's extension line origin. When finished, press <↵> to exit the command.

TIP:

- Use **ESnap** when selecting dimension extension line origin points.
- Do not explode dimensions. Associativity to the entity will be lost and the dimension will be broken into as many as 10 separate entities.
- Adjust dimension locations after they have been placed using EGrips.
- Begin the **Baseline** and **Continue** dimensions by placing a linear, aligned or angular dimension first.

Command Exercise - Dimensions

Estimated time to completion: 5 minutes

Drawing Name: `dim1.dwg`

Scope:

Dimension the object as indicated using **Linear** and **Aligned Dimensions**.

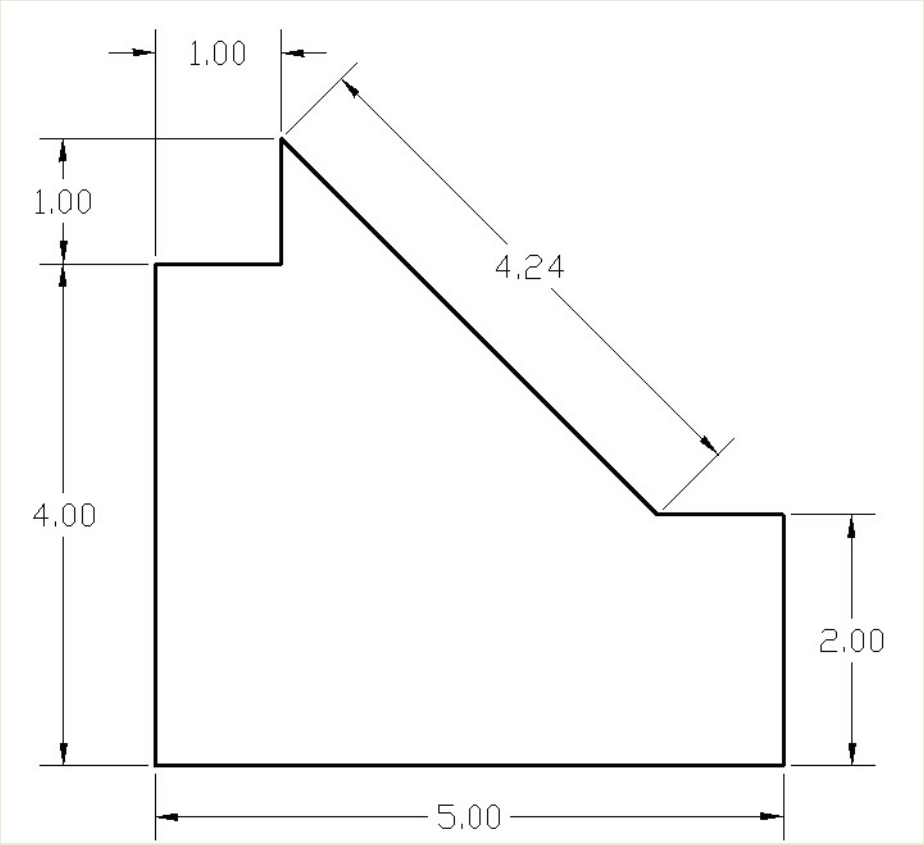

Command Exercise - Dimensions

Estimated time to completion: 5 minutes

Drawing Name: `dim2.dwg`

Scope:

Dimension the object as indicated using **Baseline** and **Continue Dimension** styles.

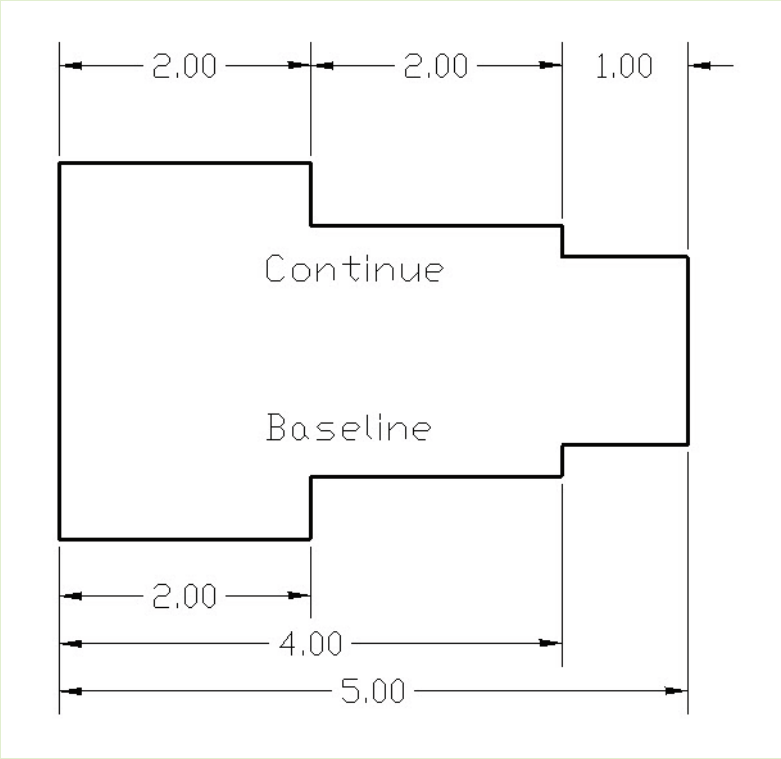

Command Exercise - Dimensions

Estimated time to completion: 5 minutes

Drawing Name: `dim3.dwg`

Scope:

Dimension the object as indicated using **Angular**, **Radius**, **Diameter Dimensions** and **Center Mark**.

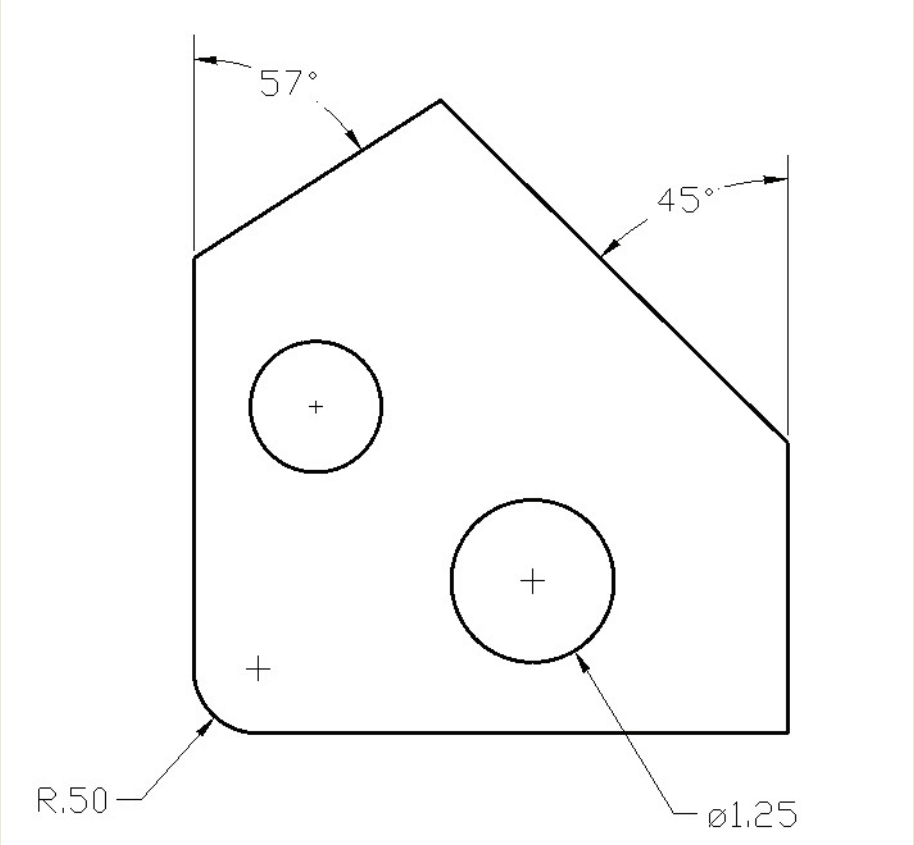

Command Exercise - Dimensions

Estimated time to completion: 5 minutes

Drawing Name: dim4.dwg

Scope:

Use the **Leader** command, first with the **Straight** and **MText** setting, Then use the **Spline** and **Copy** settings.

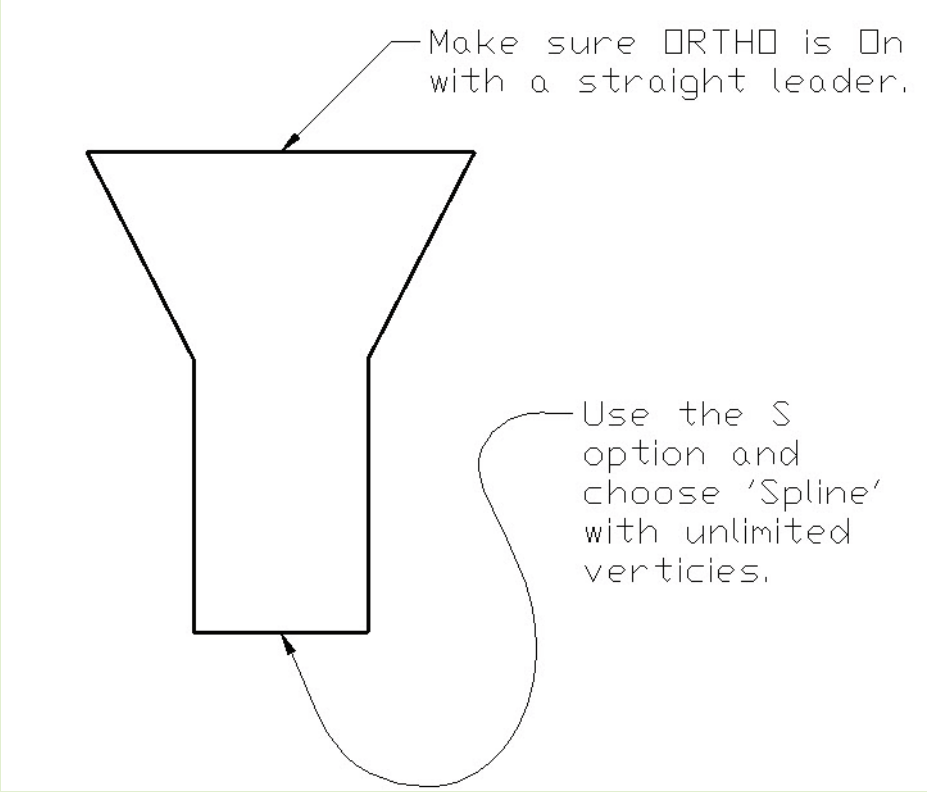

Dimension Style

Command Access

Toolbar Menu	Dimension / Dimension Style
Pull-Down Menu	Format>Dimension Style...
Command	DimensionStyle
Alias	DIMSTYLE
Dialog Box	Options>Drafting Styles>Dimension

Command Overview

The Standard Dimension Style is sufficient for most beginners. However, it may be necessary to make minor changes to the Standard Dimension Style or create additional Dimension Styles. The Dimension Style Manager dialog box lists and previews selected dimension styles. Select **Modify** to access the **Modify Dimension Style** options. Changes made to the Dimension Styles will globally affect the dimensions in the drawing that reference the style being modified, unless the change was made to an individual dimension. Only common modifications to dimension styles will be discussed in the tutorial.

Drafting Styles Dialog	Overview
Style	List the name of the current Dimension Style.
New...	Invokes a New Dimension Style dialog box where a new style name can be typed, starting with or based on a selected Dimension Style, for all or selected dimensions (linear, angular, radial,. etc.).
Rename	Renames the selected Dimension Style.
Set Overrides	You can temporarily change settings of the active DimensionStyle. These changes do not modify the DimensionStyle settings. The overriding settings can be applied as long as no other DimensionStyle is set as active.
Differences	Compares selected Dimension Styles and displays the differences.
Delete	Deletes the selected Dimension Style.
Activate	Makes selected Dimension Style current.

Dimension Style Properties	Overview
Angular Dimension	**Angular dimension settings:** ■ **Format**: Sets the primary angular units format (Decimal Degrees, Deg/Min/Sec, Grads, or Radians). ■ **Precision**: Sets the number of decimal places. ■ **Zeroes display**: Lets you suppress leading and trailing zeroes in angular dimensions. ■ **Arc length symbols:** Lets you set the display of a symbol for arc length dimensions: Before dimension text, Above dimension text or None.
Arrows	**Start arrow**: Specifies the Dimension's starting arrow head. **End arrow**: Specifies the Dimension's ending arrow head. **Leader arrow**: Sets the Dimension's leader arrow style. **Size**: Sets the arrow head size.
Dual Dimensions	These options control the use of a second, alternative dimensioning method. This mode allows dual dimensioning in metric and imperial values. **Show dual dimensions**: Determines whether to use alternate units in Dimensions. **Dual dimension settings:** ■ **Format**: Sets the alternate unit format. ■ **Precision**: Sets the number of decimal places. ■ **Multiplier for converting units**: Sets a multiplier for converting units. ■ **Round to the nearest**: Lets you specify a value for rounding. ■ **Prefix** and **Suffix**: Lets you specify a prefix and suffix for the dimension value. **Zeroes display:** ■ **Hide leading zeroes** and **Hide trailing zeroes**: Lets you suppress leading and trailing zeroes. ■ **Hide if 0'** and **Hide if 0"**: If you set **Format** to **Architectural**, **Architectural Stacked** or **Engineering**, you can also specify whether to hide zero feet and zero inches. **Insertion.**: ■ **After primary units** and **Below primary units**: Specifies whether alternate units are placed after or below the primary dimension value.

Dimension Style Properties	Overview
Linear Dimension	**Format**: Sets the primary linear units format. **Precision**: Sets the number of decimal places. **Fractional display**: Sets the stack display of fractional units. **Decimal separator**: Sets the decimal separator for dimensions whose unit format is set to Decimal. **Round to the nearest**: Lets you specify a value for rounding. **Prefix and Suffix**: Lets you type a character string to appear before or after the dimension text. For example, the suffix field can display the unit of measurement. **Measurement scale**: ■ **Scale factor**: Enlarges or reduces the size of all dimension entities (except the Dimension value itself) and allows Dimension entities to be scaled to suit the drawing's aspect ratio. **Zeroes display**: ■ **Follow sheet dimensions**: Applies the measurement scale factor to dimensions created on sheets only. ■ **Hide leading zeroes and Hide trailing zeroes**: Lets you suppress leading and trailing zeroes in decimal linear dimensions. ■ **Hide if 0' and Hide if 0"**: If you set Format to Architectural or Engineering, you can also specify whether to hide zero feet (Hide if 0') and zero inches (Hide if 0").

Dimension Style Properties	Overview
Fit	Fit options determine how to arrange Dimensions if there is not enough space for text and arrows between the extension lines. **Geometry:** When space is limited, move selected entity outside of extension lines. When there is not enough room to place text and arrows inside the extension lines, the first entity to move outside the extension lines is one of the following: ■ **Automatic**: Either text or arrows (best fit) ■ **Arrows** ■ **Text** ■ **Text and arrows** ■ **Keep text between extension lines** ■ **Hide arrows**: Suppresses arrows if they do not fit inside the extension lines. **Dimension text:** When dimension text is not in the default position, move it. When Dimension text is not in the default position, you can place it: ■ **Above the dimension line with leader** ■ **Above the dimension line without leader** ■ **Next to the dimension line** **Dimension scale:** ■ **Scale factor**: Specifies the overall scale for DimensionStyle settings. The scale factor influences size, distance and spacing, including text and arrow head sizes. ■ **Scale dimensions according to sheet**: Sets a scale factor based on the ratio between the current Viewport and the drawing sheet. **Additional options**: ■ **Dimension lines between extension lines**: Forces dimension lines to remain between the extension lines, even if the arrow heads are generated outside the dimension. ■ **Specify text placement**: Lets you position dimension text manually; horizontal justification settings are ignored.

Dimension Style Properties	Overview
Line	**Dimension line settings:** ■ **Style**: Sets the dimension line LineStyle. ■ **Weight**: Sets the dimension line LineWeight. ■ **Color**: Sets the dimension line LineColor. ■ **Offset**: Sets the offset distance of dimension lines when baseline dimensioning is applied using the **Baseline Dimension** command. ■ **Distance past start arrow**: Sets a distance to extend the dimension line beyond the extension line when you apply certain arrow heads such as tick or architectural. ■ **Hide:** ■ **Dimension line 1**: Determines whether the first dimension line and arrow head between the first extension line and the Dimension text is displayed. ■ **Dimension line 2**: Has the same effect as dimension line 1 for the second extension line and dimension text. **Extension line settings:** Extension lines are the lines that extend the dimension outside the perimeter of the measured entity, assuming that dimensioning is to take place outside of these perimeter constraints. ■ **Styles**: Sets the LineStyle for Extension line 1 and Extension line 2. ■ **Weight**: Sets the extension line LineWeight. ■ **Color**: Sets the extension line LineColor. ■ **Offset**: Sets the offset distance between the entity and the point where extension lines begin. ■ **Distance past dimension lines**: Sets the distance the extension lines should run past the dimension lines. ■ **Hide**: Hides the first and/or second extension line. ■ **Fixed length**: Specifies whether extension lines should have a preset length. Set a value in Length.

Dimension Style Properties	Overview
Radial/Diameter Dimension	**Center mark display**: ■ **None** ■ **As mark** ■ **As centerline**: Defines the display of marks that indicate a circle's center point and defines whether or not dashes or strokes should be added to center marks. ■ **Size**: Lets you specify the size of center marks for center, diameter and radius dimensions. **Radius dimension jog:** ■ **Angle**: Determines the angle of the transverse segment of the dimension line in a jogged radius dimension.
Text	**Text settings:** ■ **Style**: Sets the dimension TextStyle. ■ **Color**: Sets the dimension TextColor. ■ **Fill**: Sets the dimension text background color. ■ **Height**: Sets the dimension text height. ■ **Fractional scale**: Sets a scale factor for the text height of tolerance values relative to the general dimension text height. ■ **Frame dimension text:** Draws a frame around dimension text. **Text position:** ■ **Horizontal and Vertical**: Sets the horizontal and vertical positions of the dimension text. ■ **Offset from dimension lines**: Sets the distance that text is offset from the dimension lines. **Text alignment:** You can align the dimension text with the following options: ■ Use ISO standard ■ Align horizontally ■ Align with dimension lines

Dimension Style Properties	Overview
Tolerance	**Tolerance settings**: ■ **Calculation**: Sets the format for tolerance creation: ■ **Basic**: Displays the additional dimension measurement and deviation in a single value with a box around it. ■ **Deviation**: Appends separate plus and minus values of deviation to the dimension measurement. ■ **Limits**: Displays a maximum and a minimum value, one on top of the other. ■ **None**: Does not generate a tolerance value. ■ **Symmetrical**: Appends a plus/minus tolerance value to the dimension measurement which indicates the positive and negative deviation in a single value. ■ **Precision**: Sets the number of decimal places. ■ **Maximum value** and **Minimum value**: Sets values for the positive or negative tolerances. ■ **Scale**: Sets the tolerance scale. ■ **Vertical text justification**: Sets the tolerance text justification. ■ **Zeroes display** ■ **Hide leading zeroes and Hide trailing zeroes**: Lets you suppress leading and trailing zeroes in decimal tolerance dimensions. If you set the Format for Linear Dimension to Architectural or Engineering, you can also specify whether to hide zero feet (Hide if 0') and zero inches (Hide if 0").
Dual Dimension	**Precision**: Sets the number of decimal places for alternate dimensions in geometric tolerances. ■ **Zeroes display** ■ **Hide leading zeroes and Hide trailing zeroes**: Lets you suppress leading and trailing zeroes in decimal alternate dimensions. If you set the Format for Linear Dimension to Architectural or Engineering, you can also specify whether to hide zero feet (Hide if 0') and zero inches (Hide if 0").

General Procedure

To create a new Dimension Style:

1 Click **Format**>**Dimension Style...** from the pull-down menu.
2 Select a **Dimension Style** to start with from the drop-down list.
3 Click the **New** button, then type the **New Style Name**, or accept the default name.
4 Click **Continue** to access the **Modify Dimension Style** dialog box.

To modify a Dimension Style:

1 Click **Format**>**Dimension Style...** from the pull-down menu.
2 Click the **Dimension Style**, and then select the **Modify** button.
3 Click the appropriate tab in the **Modify Dimension Style** dialog box.
4 Click **OK** to close and continue.

To delete a Dimension Style:

1 Click **Format**>**Dimension Style...** from the pull-down menu.
2 Click the **Dimension Style** from the list, then right-click (**RMB**) to access the Shortcut menu.
3 Click **Delete**. The dimension style will not be deleted if it is current, or if there are any dimensions in the drawing using that dimension style.

TIP:

- The **Clean** command can also be used to delete unreferenced **Dimension Styles**.
- The **Standard Dimension Style** will be adequate for most beginners.
- When creating a new Dimension Style, base the new style on Standard, and apply changes to it, leaving Standard alone, unless only minor changes are needed.
- Make global modifications to dimensions in the drawing by changing the Dimension Style. Existing dimensions should automatically update. If for some reason they do not update, select the **Dimension Rebuild** command from the Dimension toolbar or from the Dimension pull-down menu.

Command Exercise - Dimension Styles

Estimated time to completion: 5 minutes

Drawing Name: `dimstyle1.dwg`

Scope:

Dimension the object on the left using the standard dimension style. Create a new dimension style and call it `TEST` based on the standard dimension style with an overall scale (geometry) of **2** (remember to set it to current). Dimension the object on the right using this dimension style.ss

Edit Dimension Location

Command Access

Toolbar Menu	
Pull-Down Menu	
Command	With the command line blank, select the dimension.
Alias	
Dialog Box	

Command Overview

The placement of dimension lines and text can be adjusted using EGrips. With the command line blank, select the dimension. Select a Grip box at either the arrow or the dimension text. Drag the cursor and then pick the new location. The location of the dimension text can be moved closer to one of the extension lines by using the same method. This is also a good way to move the extension line origin points, should they be incorrectly selected.

General Procedure

To move the dimension line:

1. With the command line blank, click the dimension.
2. Click either the text or arrowhead grip. The default **EGrip** mode will be **Stretch**.
3. **Stretch** the dimension line and pick a new location.
4. Press **Esc** two times to cancel the **EGrip** selection.

To move the dimension text:

1. With the command line blank, click the dimension.
2. Click the dimension text. The default **EGrip** mode will be **Stretch**.
3. Drag the dimension toward one extension line or the other, or to a new location.
4. Press **Esc** two times to cancel the **EGrip** selection.

To move a dimension origin point:

1. **Zoom** into the area where the dimension origin point should meet the object (intersection, endpoint, etc.).
2. With the command line blank, click the dimension.
3. Click the dimension origin point. The default **EGrip** mode will be **Stretch**.
4. Use **ESnap** to drag the origin point to the correct location on the object.
5. Press **Esc** two times to cancel the **EGrip** selection.

TIP:

- Remember to press the **Esc** key two times to cancel the grip selection. Pressing <↵> will repeat the last command.

Edit Dimension Text

Command Access

Toolbar Menu	
Pull-Down Menu	Modify>Entity>Annotation
Command	EditAnnotation
Alias	EDITTEXT
Dialog Box	Edit Annotation

Command Overview

DraftSight dimensions are associated with the entity being dimensioned, therefore, if the dimension text appears to be incorrect, it's either because the dimension line origin points were incorrectly selected, or the drawing is incorrect. Check first to see that the origin points are at the correct location. If this seems to be correct, then go back and correct the drawing. The **Edit Text** command (EditAnnotation) should be used to add annotation to a dimension and not to delete or overwrite existing dimension text.

General Procedure

1. Click **Modify**>**Entity**>**Annotation** from the pull-down menu.
2. Click the dimension text to edit.
3. In the **Edit Annotation** dialog, make the necessary changes.
4. Click **OK**.

TIP:

- When you maintain the associativity between the dimension and the entity being dimensioned, changes made to the entity will automatically update the dimension text.

Edit Dimension Properties

Command Access

Toolbar Menu	Dimension / Dimension Style
Pull-Down Menu	Format>Dimension Style
Command	DimensionStyle
Alias	DIMSTYLE
Dialog Box	Options>Drafting Styles>Dimension

Command Overview

When changing dimension properties, decide whether this change should apply globally to the dimension style, or to a single dimension.

For instance, if the precision of the primary units of a dimension style are set to four decimal places, and the user wants the precision of radial dimensions to always be two places, then a subset style for **Radius Dimensions** needs to be created from the original dimension style. Use the **Dimension Style** dialog box to make the desired changes, and all of the radial dimensions in the drawing will automatically be updated to reflect the change.

If you want to change only a selected dimension in the drawing, use the **Properties** command. Changes made to individual dimensions will usually not update globally if a change is later made to that **Dimension Style**.

General Procedure

To change the dimension style properties:

1. Click **Format**>**Dimension Style**... from the pull-down menu.
2. In the **Dimension Style Manager** box, select the dimension style to change, then click A**ctivate**.
3. Select the options to change, and then click the **Save to Active Styles** button.
4. Select **OK** to exit.

To make changes to a specific feature of an existing dimension:

1. Click **Format**>**Dimension Style**... from the pull-down menu.
2. In the **Style** drop-down, choose the name of the dimension style to change.
3. Select the options to change.
4. Click **Apply**, and then **OK**.

To make changes to an individual dimension:

1. Click **Tools**>**Properties** from the pull-down menu.
2. With an empty command line, click the dimension to change.
3. In the **Properties Manager**, choose the options to change.
4. Press the **Esc** key to exit.

Command Exercise - Edit Dimensions

Estimated time to completion: 5 minutes

Drawing Name: `dimedit1.dwg`

Scope:

Use the **Properties Manager** to modify the dimensions as indicated.

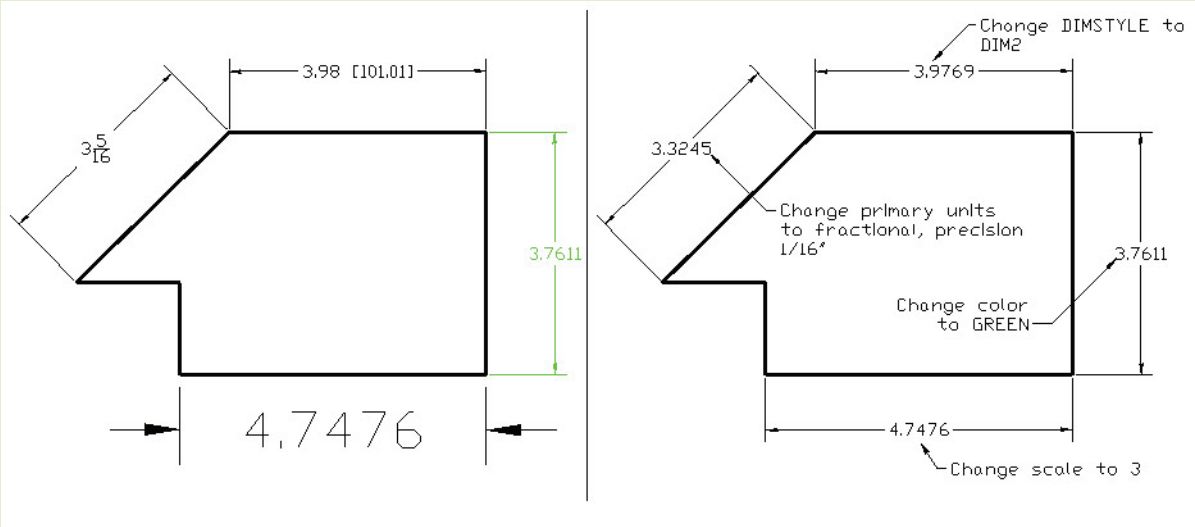

Command Exercise - Edit Dimensions

Estimated time to completion: 5 minutes

Drawing Name: `dimedit2.dwg`

Scope:

Use the **Properties Manager** to edit the dimensions.

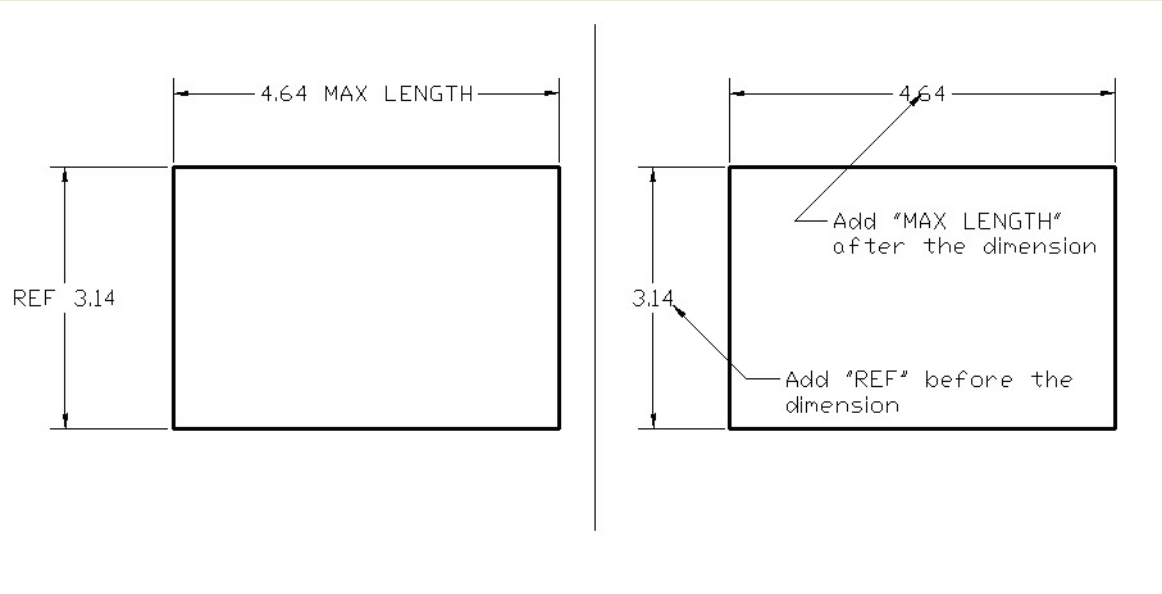

Command Exercise - Edit Dimensions

Estimated time to completion: 5 minutes

Drawing Name: `dimedit3.dwg`

Scope:

Use **EGrips** to adjust the dimensions as indicated.

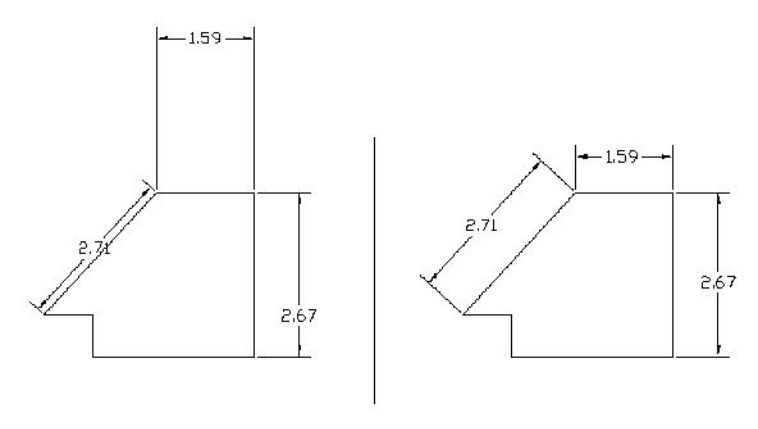

Command Exercise - Edit Dimensions

Estimated time to completion: 5 minutes

Drawing Name: `dimedit4.dwg`

Scope:

Use the **Stretch** command to modify the part. Notice the dimensions will change automatically.

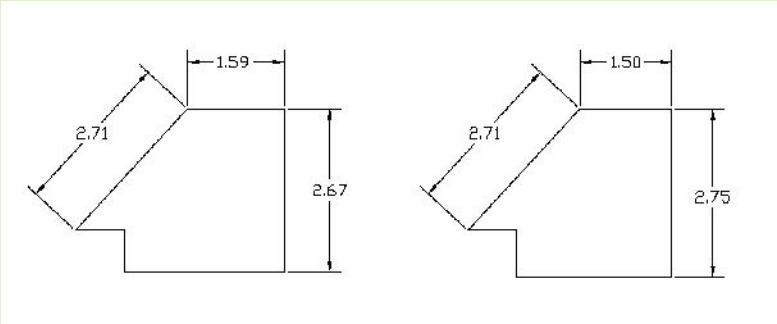

Section 9 Review Questions

1 Identify the following icons by writing the command and the toolbars where they can be found:

	Icon	Command	Toolbar
a.			
b.			
c.			
d.			
e.			
f.			
g.			
h			
i			
j			
k			
l			

2 How can you initiate the **Note** command?

3 What happens when you **Explode** a dimension?

4 How can you modify a dimension?

5 In what pull-down menu can you find the **Text Style** command?

6 In what pull-down menu can you find the **Dimension Style** command?

Section 10
Drawing Output and Layout

Estimated Class Time: 2.5 hours

Objectives

This section will cover how to create a drawing Layout from a Model and how to print a drawing. The general idea is to create the drawing in the Model Tab and print the drawing from the Sheet Tab. Drawing may also be printed from the Model Tab. There are advantages and disadvantages to using the Model or Sheet tab to print a drawing.

- **Drawing Layout**
  Create a drawing layout from the Model Tab.
- **Drawing Layout ViewPorts**
  Insert a Title Block in the Sheet Tab and create drawing views.
- **Print Command**
  Print drawings from either the Model Tab or the Sheet Tab.

Option	Model Tab	Sheet Tab
Drawing Views	In the Model Tab, only one view of the drawing may be printed at a time.	In the Sheet Tab, it is possible to print multiple views of the same drawing. These views can show different parts of the drawing, and views can be zoomed at different scales.
Plot Scale	In Model Tab, the drawing must be printed to scale. It is therefore important that the drawing boundary and title block reflect the drawing scale. Text, dimension styles and LineTypeScale must also reflect the print scale.	Drawing views placed in the Sheet Tab must be zoomed to scale (nX/nXP). Dimension notes and the title block are placed in the Sheet at a scale of 1. The Sheet is printed at a scale of 1.
Drawing Revisions	In the Model Tab, the drawing must be revised in each instance where the image is copied in the drawing (for instance, if a detail was shown at a scale of 1:1 and 1:10).	In the Sheet Tab, each viewport is a window to the model. Therefore if a change is made to the drawing in the Model Tab, the changes will automatically be reflected in the Sheet Tab viewports.

Drawing Layout

Command Access

Toolbar Menu	Sheets / New Sheet and Sheets / Sheet from Template
Pull-Down Menu	File>Sheet>New Sheet and Sheet>Sheet from Template...
Command	Sheet
Alias	Layout
Dialog Box	Specify template from file

Command Overview

You can create a new Sheet or rename, copy, save or delete existing Sheets. To create a finished drawing, two different working spaces are provided: Model and Sheet. A Sheet is a page that allows you to set up a printout or plot of your drawing. You can create up to 255 Sheets of your drawing on individual tabs. The names of the Sheet tabs must be unique. When you use the **Sheet** command, you have options to manage Sheet tabs. Several of these options are also available by right-clicking a Sheet tab.

General Procedure

To create a new Sheet:

1. Click **File>Sheet>New Sheet** (or type **Sheet** and specify the **New** option).
2. Type a `Name` for the Sheet.

To create a New Sheet based on a Sheet in another file:

1. Click **File>Sheet>Sheet from Template** (or type **Sheet** and specify the **Template** option).
2. In the **Select template from file** dialog box, select a *.dwt, *.dwg, or *.dxf file, then click **Open**.
3. In the **Sheet List** dialog box, select a Sheet name and click **OK**.
   The sheet and all entities from the specified file are inserted in the drawing.

To copy a Sheet:

1. Type **Sheet** at the command prompt.
2. Specify the **Copy** option.
3. Type the `Name` of the Sheet to copy.
4. Type a `Name` for the Sheet.

To rename a Sheet:

1. Type **Sheet**.
2. Specify the **Rename** option.
3. Type the `Name` of the Sheet to rename.
4. Type a `Name` for the Sheet.

To save a Sheet as a drawing template file:

1 Type **Sheet**.
2 Specify the **Save As** option.
3 Type the `Name` of the Sheet to save as a template.
The template file is saved without Block definition information and unused drawing properties such as Layers and LineStyles.

To activate a Sheet:

1 Type **Sheet**.
2 Specify the **Activate** option.
3 Type the `Name` of the Sheet to activate.

To delete a Sheet:

1 Type **Sheet**.
2 Specify the **Delete** option.
3 Type the `Name` of the Sheet to delete.

To list all active Sheets:

1 Type **Sheet**.
2 Specify the **?** option.
The active Sheets are listed in the command window.

TIP:

- You can turn **On** and **Off** the display of the Model and Sheet tabs. Click **Tools>Options**. Click **Drawing Settings**, expand **Display**, and select or clear **Show Model and Sheet tabs**.

Command Exercise - Creating a Drawing Layout

Estimated time to completion: 5 minutes

Drawing Name: `layout1.dwg`

Scope:

Create a drawing layout. Use a single viewport. Zoom into the floating viewport 2:1 (2XP).

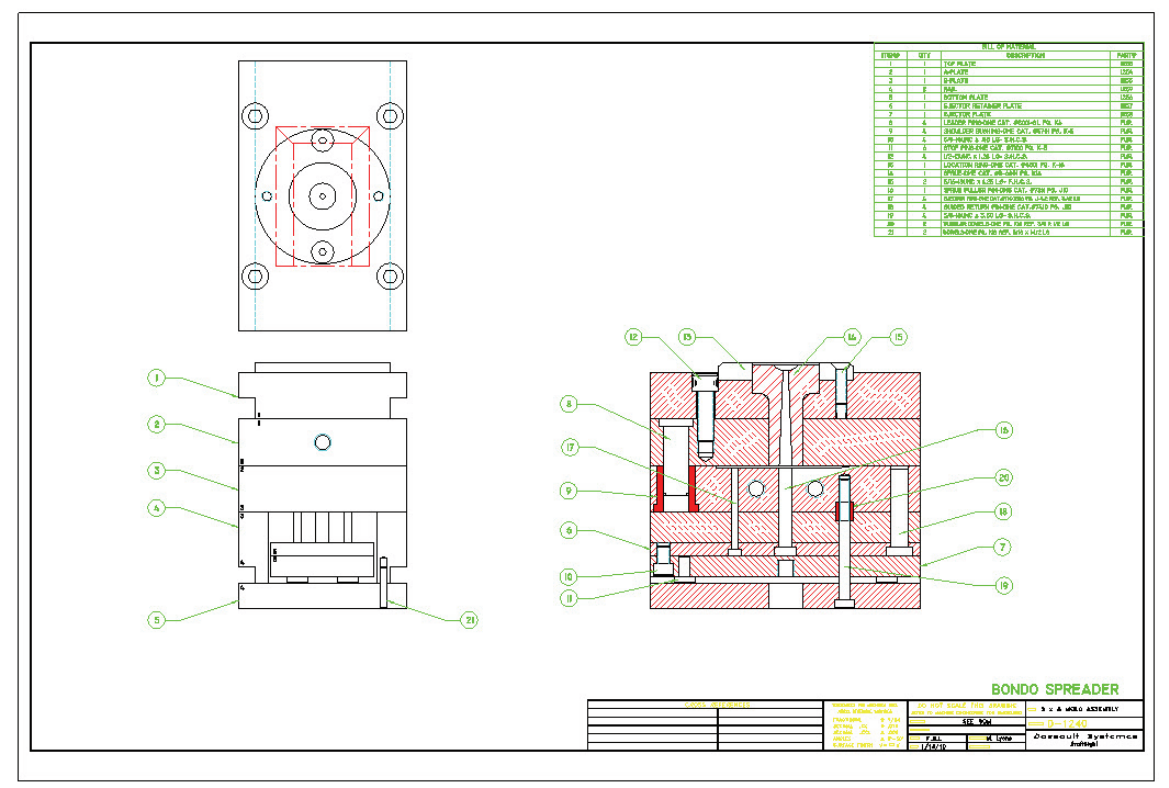

Command Exercise - Creating a Drawing Layout

Estimated time to completion: 5 minutes

Drawing Name: `layout2.dwg`

Scope:

Make the floating viewport window frame invisible. Use the **Properties** command to set the viewport frame on the VP layer. Freeze the VP layer. Fill in the information in the title block as follows (replace existing text):

Your Name, Today's Date, Title - 5 x 8 MOLD ASSEMBLY, Part No. D-1234

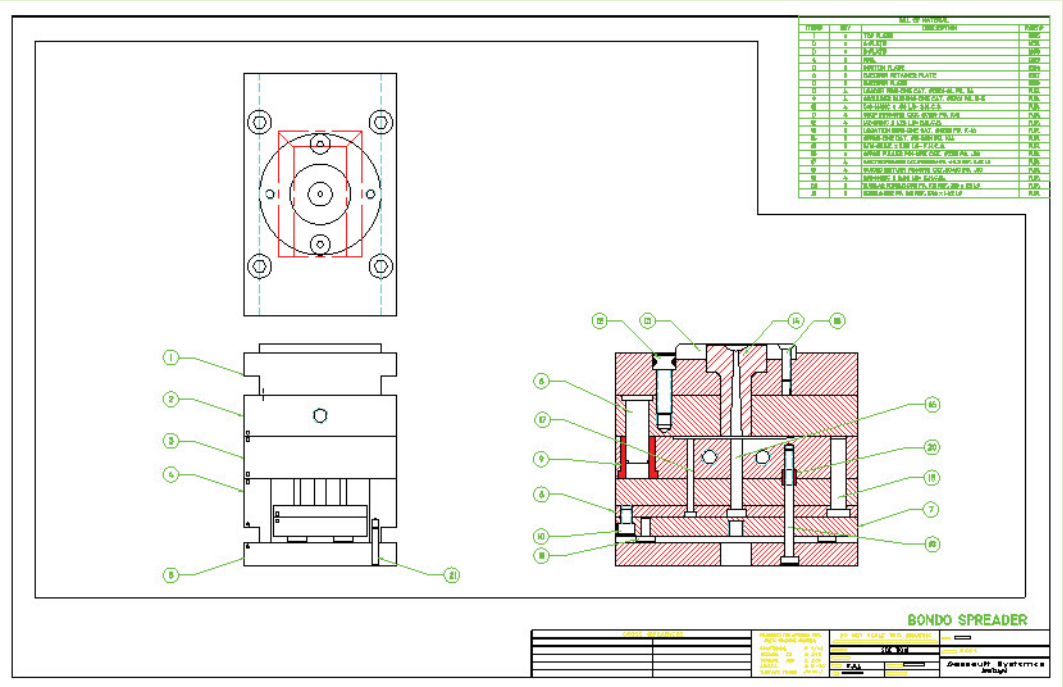

View Tiles

Command Access

Toolbar Menu	View Tiles
Pull-Down Menu	View>View Tiles (Choose Option)
Command	ViewTiles
Alias	VTILES
Dialog Box	View Tiles

Command Overview

You can divide the drawing window into multiple views. Each view can contain a unique view of the drawing. This lets you view different areas of the drawing, whether they are plan views in different detailing grades, or the model from different viewpoints in 3D space.

You can work in only one view at a time, the current view.

Tiled views do not overlap on the workspace like drawing windows can. It is just as if you divided the drawing window into two, three or four rectangular areas. You can arrange these areas in several combinations.

A group of tiled views is called a ViewTile configuration.

You can define, save and restore ViewTile configurations using the **View Tiles** dialog box.

General Procedure

To define a ViewTile configuration:

1. Click **View>View Tiles>View Tiles Manager** (or type **ViewTiles**).
2. Under **Type**, select **New**.
3. Under **Default configurations**, select a **ViewTile configuration** you want to use or store under a name.

   Active Model Configuration lets you use the configuration as it was when you opened the dialog box.
4. Under **Orientation**, select:
   - **2D**: Initiates all ViewTiles of the configuration you define with the current view.
   - **3D**: Lets you define standard orthographic or isometric 3D views in Replace view with for each ViewTile.
5. Under **Apply to**, select:
   - **Active View Tile**: Applies the ViewTile configuration to the current view. You can further subdivide standard ViewTile configurations.
   - **Display**: Applies the ViewTile configuration to the entire drawing.

To save a ViewTile configuration under a name:

1 Click **View>View Tiles>View Tiles Manager** (or type **ViewTiles**).
2 Under **Type**, select **New**.
3 Under **Name**, type the `Name` of the ViewTile configuration to save.
4 Under **Default configurations**, select a default configuration.
5 If you want different 3D views represented in the views:
   - Under **Orientation**, select **3D**.
   - Under **Replace view with**, select an orthographic or isometric view to display in the specified view.
6 Click **Save**.

To restore a named ViewTile configuration:

1 Click **View>View Tiles>View Tiles Manager** (or type **ViewTiles**).
2 Under **Type**, select **Named**.
3 Under **Named configurations**, select a name.
4 Click **OK**.

To delete a named ViewTile configuration:

1 Click **View>View Tiles>View Tiles Manager** (or type **ViewTiles**).
2 Under **Type**, select **Named**.
3 Under **Named configurations**, right-click a name and click **Delete**.
4 Click **OK**.

To join views of a ViewTile configuration:

1 Type -**Viewport.**
2 Specify the **Join** option.
   - Two adjacent ViewTiles combine into one ViewTile. The resulting ViewTile inherits the view of the dominant ViewTile.

Command Exercise - Creating ViewTiles in the Sheet Tab

Estimated time to completion: 5 minutes

Drawing Name: `2vtiles.dwg`

Scope:

In the Sheet tab, create two ViewTiles inside the border of the drawing. In the left-hand ViewPort, Zoom the drawing so all views are present. In right-hand ViewPort, Zoom into the right-side view only.

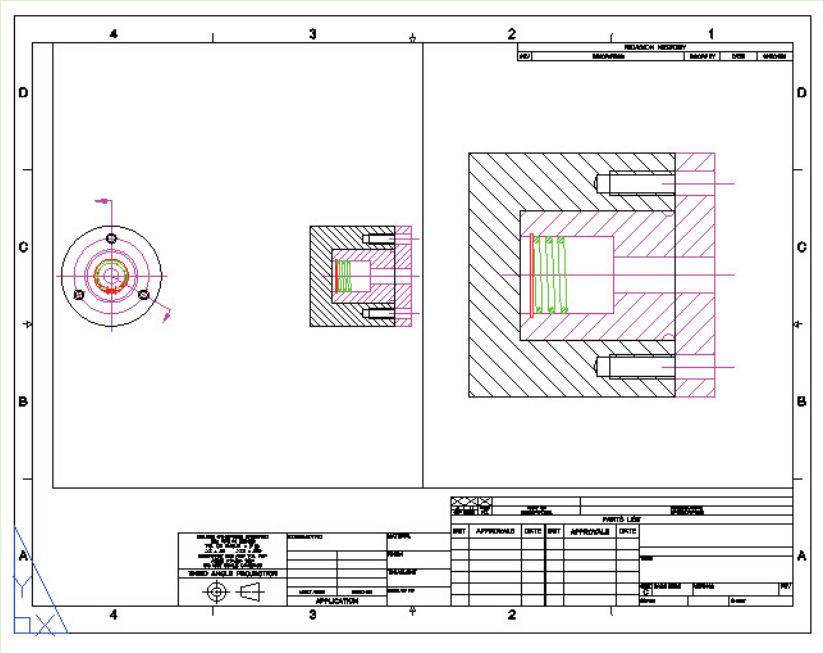

Working with Viewports on Sheets

Command Access

Toolbar Menu	
Pull-Down Menu	
Command	Viewport
Alias	MV
Dialog Box	

Command Overview

The **Viewport** command creates and controls multiple tiled views on Sheets, called Viewports. Viewports on Sheets are different than ViewTiles in model workspace which are created using the ViewTiles command.

You can create, erase, move, copy, scale and stretch Viewports on Sheets.

NOTE:

- You cannot use the **Viewport** command in the Model tab.

To activate a Sheet:

1 Click a **Sheet tab** (if the Model tab is active).

To create a rectangular Viewport:

1 Type **Viewport** at the command prompt.
2 Click in the graphics area to set the first and second Viewport corner.

To create two, three or four Viewports:

1 Type **Viewport**.
2 Specify the **2**, **3** or **4** option depending on how many viewports you want to add to the current Sheet.
3 Specify an option for the arrangement (**Horizontal** or **Vertical**, for example).

2 Viewports:

3 Viewports: 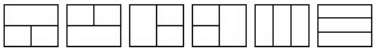

4 Viewports:

4 Click in the graphics area or type a value to set the corners of the viewport, or specify the **Fit** option.

To create a Viewport that fills the Sheet to the edges of the printable area:

1 Type **Viewport**.
2 Specify the **Fit** option.
When the printable area is turned off, the Viewport fits the entire Sheet.

To convert a closed PolyLine, Circle, Ellipse, closed Spline or Region into a Viewport:

1 Type **Viewport**.
2 Specify the **Entity** option.
3 In the graphics area, select the entity to convert into a Viewport.

To create a Viewport with a polygonal boundary:

The Polygonal option lets you draw an irregular shape that defines the boundary of a Viewport.

1 Type **Viewport**.
2 Specify the **Polygonal** option.
3 Click in the graphics area to set the first point that defines the boundary.
4 Define the rest of the boundary:
- Click in the graphics area to specify additional points.

- or -

- Specify the **Arc** option. Follow the prompts to create arc segments for the Viewport boundary. The options for creating arc segments are similar to those of the **PolyLine** command.

- or -

- Specify the **Length** option. Follow the prompts to create a line segment of a specified length at the same angle as the previous segment. This option is useful to append a straight segment of a specified length tangent to a previous arc segment.

- or -

- Specify the **Close** option to close the boundary.

- or -

- Specify the **Undo** option to undo the most recent segment during the creation of the Viewport boundary.

To turn on Viewports:

1 Type **Viewport**.
2 Specify the **On** option.
3 In the graphics area, select the Viewports to turn on.
The model displays in the selected Viewports.

To turn off Viewports:

1 Type **Viewport**.
2 Specify the **Off** option.
3 In the graphics area, select the Viewports to turn off.
The model does not display in the selected Viewports.

To set Viewport print options:

1 Type **Viewport**.
2 Specify the **Shaded** view option.
3 Specify an option:
   - **Current display**: Prints the Viewport as it is displayed on-screen.
   - **Hidden**: Prints the Viewport with hidden lines removed.
   - **Rendered**: Prints the Viewport rendered.
   - **Wireframe**: Prints the Viewport as wireframe.
4 In the graphics area, select the Viewports to which the settings should apply.

To lock or unlock a Viewport:

The Lock option prevents changes to the zoom scale factor when you work in locked Viewports in model workspace.

1 Type **Viewport**.
2 Specify the **Lock** option.
3 Specify **On** to lock or **Off** to unlock.
4 In the graphics area, select the Viewports to which the settings should apply.

To restore Viewport configurations saved using the Viewport command:

1 Type **Viewport**.
2 Specify the **Restore** option.
3 Type the `Name` of the Viewport configuration to restore.
   - or -
   - Specify the **?** option to list Viewport configurations.
   - or -
   - Specify the **Active model configuration** option.

Print

Command Access

Toolbar Menu	Standard
Pull-Down Menu	File>Print
Command	Print
Alias	PLOT
Dialog Box	Print

Command Overview

You can print the drawing to a printer, plotter or file.

General Procedure

To print or plot a drawing:

Print Option	Overview	Settings
Page Layout Options		
Quick Print	Prints exactly what is on screen with the system default printer, default paper size, Fit to paper size selected, and Print range set to Current view.	Default Printer Default Paper Size Scale: fit to paper
Use previous settings	Repeats printing with the same settings you used for the previous printout.	Same as previous print
Manual Setup	Lets you determine the current print settings.	Choose Printer Choose Paper Choose Scale Choose Print Range
Printer/plotter	In Name, select an output device. Printers and plotters available on your system are listed. PDF, JPG, PNG and SVG are also listed. These built-in plotters print to file in the specified format. Click Properties to set up the printer or plotter as needed in the dialog box provided by the printer's driver.	Choose Printer

Print Option	Overview	Settings
Paper size	Select a size from the list of international standardized paper size formats and printer-specific paper formats.	Choose Paper size
Print scale	Clear Fit to paper size to apply specific scaling. Select or define a Scale. In Scale, select User-defined, then determine the ratio between paper units (in Millimeters or Inches) to drawing units. Select or clear Scale LineWeight to print scale.	Choose appropriate scale
Print Range		
All geometry	Prints the range that is determined by the bounding box of all visible entities.	
Drawing boundary	Prints the range that is determined by the drawing boundaries.	
Named view	Prints the selected user-defined view.	
Specific	Click Specify Window to select two opposite points for the print boundaries in the graphics area.	
Current view	Prints the drawing that is visible on screen.	
Additional Options		
Hide geometry on sheet	Specifies whether the geometry of the model shown in Viewports is printed with hidden lines removed. The option is available only from a Sheet tab.	

Print Option	Overview	Settings
Print in background	The output is processed in the background so you can continue working in the drawing.	
Print sheet last	Specifies what to print first: the geometry of the model in Viewports or the geometry of the Sheet in the graphics area. The option is available only from a Sheet tab.	
Use assigned LineWeight	Prints entities in the LineWeights assigned in the Layers. This option is available only if Use assigned print styles is cleared.	
Use assigned print styles	Determines whether PrintStyles applied to Layers and entities are printed. This implies that assigned LineWeights are also printed.	
Shaded Views		
Print style	The shade mode you want to apply when printing.	
Print quality	Quality level when printing. The available options depend on the selected printer.	
DPI	Sets the number of dots per inch printed depending on the Print quality setting.	
Print style table	Select a PrintStyle.	Click New to create a new PrintStyle. Click Edit to modify the selected PrintStyle
Orientation	Select Portrait or Landscape format. Select Print inverse to reverse the output direction.	

Command Exercise - Printing a Drawing

Estimated time to completion: 5 minutes

Drawing Name: `print1.dwg`

Scope:

Activate Layout1 tab. Delete the current ViewPort and create a new one that is 22 x 17. Fit the drawing into the ViewPort using Zoom .5xp, and center the drawing. Print to a local printer at a scale of .5 on an 8.5 x 11 sheet of paper.

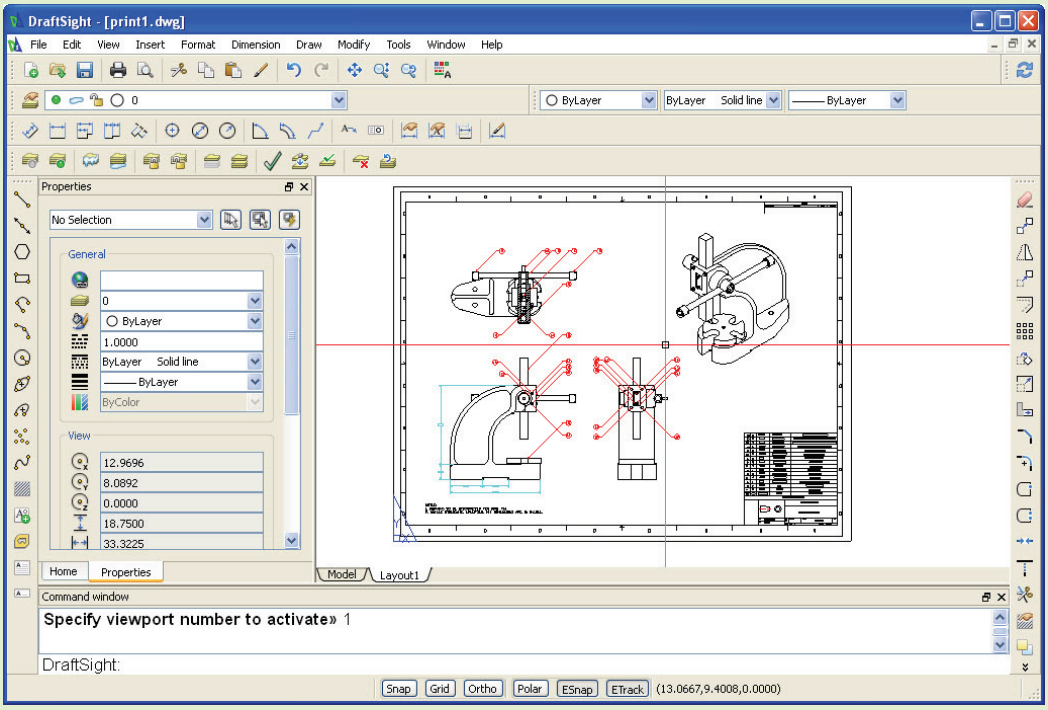

Section 10 Review Questions

1 True or false: You should create your drawing in the Model tab, but you can print your drawing from either the Model tab or the Sheet tab.

2 From what pull-down menu can you find the ViewTiles command?

3 What command does this icon represent and on which toolbar is it located?

4 What toolbar contains the commands for creating View Tiles?

5 What is "Print Area" and how does it relate to paper size?

6 True or false: When you print from the Sheet Tab, your print scale must be 1:1.